MITSUBISHI ELECTRIC ENGINEERING

MELSEC-A/AnS Series
→MELSEC iQ-R Series Upgrade Tool

MELSEC iQ-R series

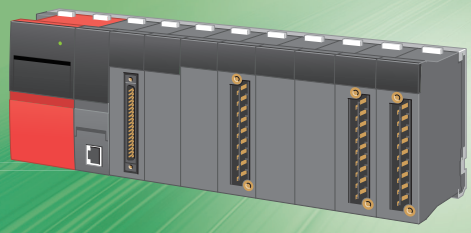

Upgrade Tool

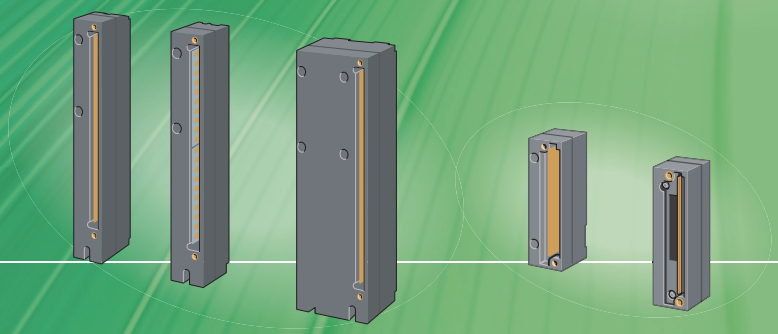

New upgrade tools now available!
Upgrade tools for replacing MELSEC-A/AnS series
with MELSEC iQ-R series

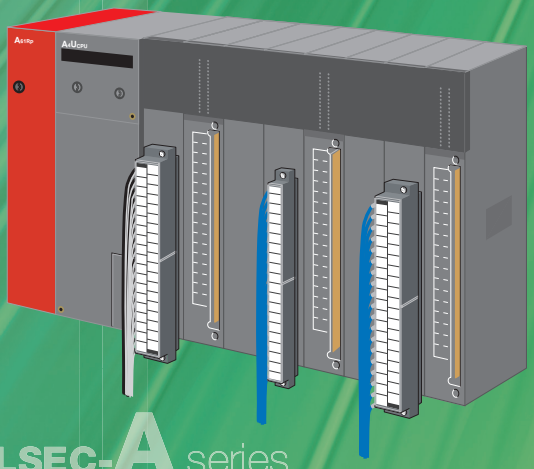

MELSEC-A series

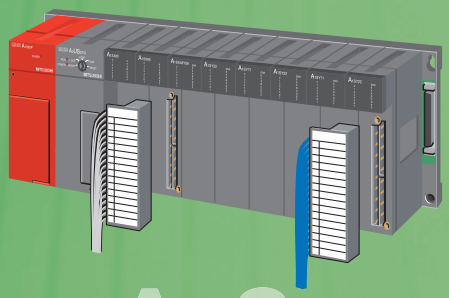

MELSEC-AnS series

MITSUBISHI ELECTRIC ENGINEERING COMPANY LIMITED

A iQ-R series MELSEC-A Series / MELSEC iQ-R Series Upgrade Tool

Upgrading the MELSEC-A series to the MELSEC iQ-R series

- **Simplifies replacement with the MELSEC iQ-R series**
  The upgrade tool makes it easy to replace the Mitsubishi Electric programmable controller MELSEC-A series with the MELSEC iQ-R series.
- **Significantly shortens the time required for input, output, analog, and high-speed counter module wiring, and significantly reduces wiring errors**
  - The upgrade tool allows you to connect the wiring connected to the MELSEC-A series input/output/analog/high-speed counter modules as is to the MELSEC iQ-R series using a conversion adapter.
    (Some power supply and common terminal connections need to be changed.)
  - With a base adapter, the MELSEC iQ-R series can be mounted by using the mounting holes of the MELSEC-A series base unit. (No need to drill any additional mounting holes.)
- **Permits reuse of sequence programs**
  The upgrade tool allows you to convert a MELSEC-A series program into a MELSEC iQ-R series program using the Mitsubishi Electric programming tools.
  For details, contact Mitsubishi Electric Corporation.

Product Overview

This upgrade tool comprises a "conversion adapter" that is used to transfer the existing wiring of the Mitsubishi Electric programmable controller MELSEC-A series module to wiring for a MELSEC iQ-R series module, a "conversion adapter support flange" that is used to secure the conversion adapter at the bottom, and a "base adapter" that the MELSEC iQ-R series can be mounted by using the mounting holes of the MELSEC-A series base unit.

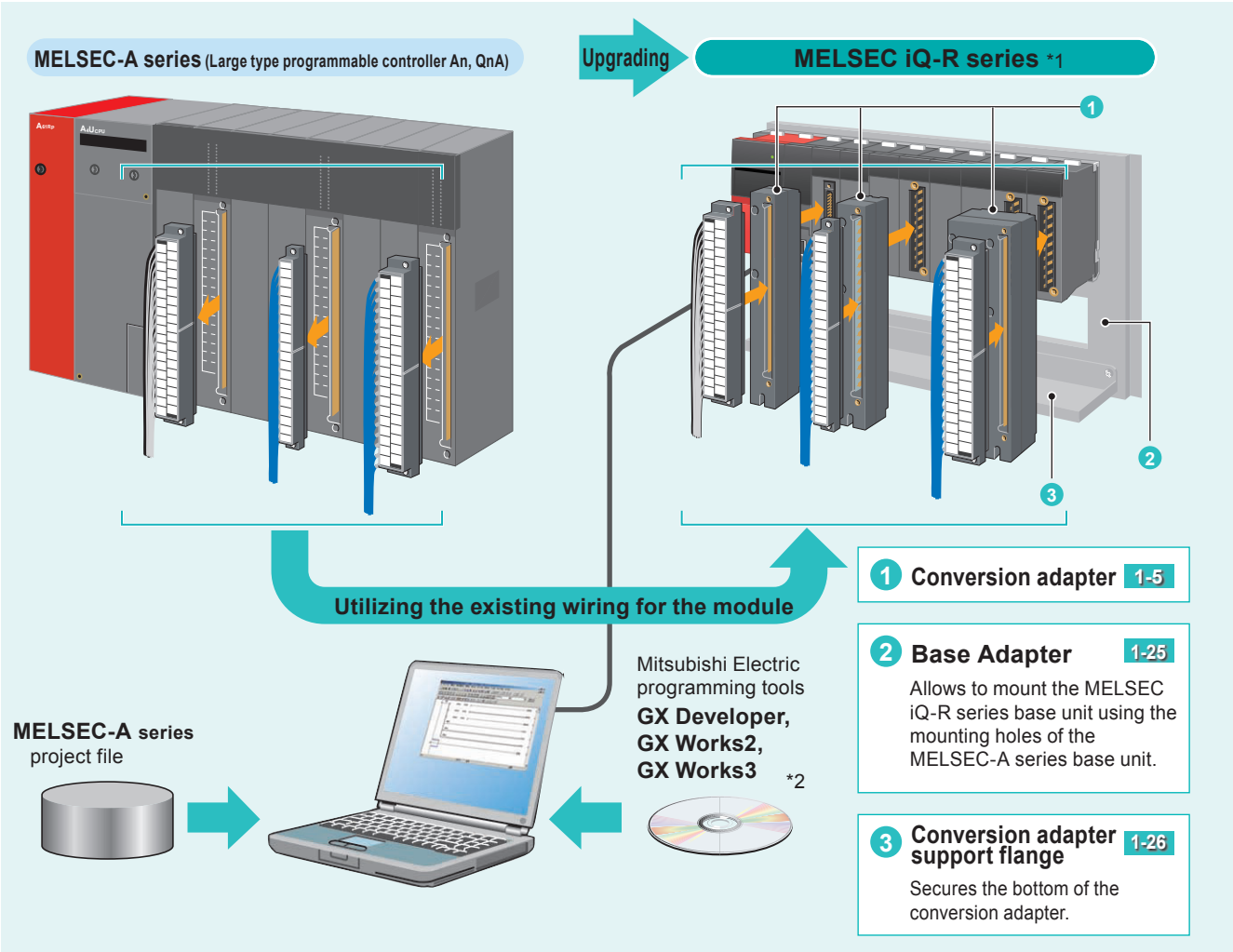

* 1: When replacing the MELSEC-A series with the MELSEC iQ-R series, check that it can be mounted because the width and depth of the modules differ.
* 2: Example of how to change the program
1) On GX Developer, convert the PLC type for the target program to the MELSEC-Q series and save (GPJ file).
2) On GX Works2, open the saved project by selecting “Open other data” → “Open Other Project” from “Project” and save it (GXW file).
3) On GX Works3, open the saved project by selecting “Open Other Format File” → “GX Works2 Format” → “Open Project” from “Project”.

Model List

1 Conversion Adapter

When selecting a conversion adapter, be sure to refer to the specification comparison charts and notes on pages 1-5 to 1-24. These pages describe precautions such as differences in the number of points per common.
For detailed specifications and general specifications not described in the specification comparison charts, refer to the user's manual for the module used.
Note that the areas where the specifications differ between the MELSEC-A series and the MELSEC iQ-R series are restricted in terms of specifications when replacing. Check the specifications of the connected devices.

For Input/Output Modules

<1-slot type>

Input / Output	MELSEC-A series module mode before replacement	MELSEC iQ-R series module model after replacement	Note	Conversion adapter				Page
				Model	Shape (No. of points/No. of pins)		No. of input/output points	
					MELSEC-A series	MELSEC iQ-R series		
Input	AX10, AX10-UL	RX10	-	**ERNT-1AR10XY**	Terminal block (20 points)	Terminal block (18 points)	16 points	**1-5**
	AX40, AX40-UL	RX40C7	*1, 5					
	AX70, AX70-UL							
	AX80, AX80-UL							
	AX80E							
	AI61		*5, 9					
	AI61-S1		*9					
Output	AY10	RY10R2	*1					
	AY11, AY11-UL							
	AY11E							
	AY11EEU							
	AY22	RY20S6						
	AY40, AY40-UL	RY40NT5P	*1	**ERNT-1AR40Y**				**1-7**
	AY40P							
	AY50, AY50-UL							
	AY70, AY70-UL		*1, 3					
	AY80	RY40PT5P	*1					
	AY80EP							
Input	AX31	RX41C4, RX41C6HS	*2	**ERNT-1AR41X**	Terminal block (38 points)	Connector (40P)	32 points	**1-8**
	AX31-S1		-					
	AX41, AX41-UL		*1, 5					
	AX41-S1							
	AX81							
	AX81-S1							
	AX81-S3							
	AX71	RX41C4, RX41C6HS, RX61C6HS	*1, 4					
Output	AY41, AY41-UL	RY41NT2P	*1, 6	**ERNT-1AR41Y**				**1-9**
	AY41P							
	AY71		*1, 3, 6					
	AY81	RY41PT1P	*1, 7, 8					
	AY81EP							
Input	AX82	RX41C4 × 2 modules, RX41C6HS × 2 modules	*5, 10, 11	**ERNT-ASLCXY81 × 2 modules**	D-Sub connector (37P) ×2	Connector (40P) ×2	64 points	**1-10**
Output	AY82EP	RY41PT1P × 2 modules	*10, 11					

* 1: Since the number of points per common differs, check the common terminal connection of the module before replacement.
* 2: When a rated input voltage of 12VAC, 24VAC, or 12VDC is used, change the voltage to 24VDC.
* 3: When a rated input voltage of 5VDC is used, change the voltage to 12VDC or 24VDC.
* 4: When a rated input voltage of 12VDC is used, change the voltage to 5VDC or 24VDC.
* 5: When a rated input voltage of 5VDC or 12VDC is used, change the voltage to 24VDC.
* 6: When 16 points/2 commons are used, consider replacing the module with two RY40NT5Ps using the ERNT-1AR51Y.
* 7: When 16 points/2 commons are used, consider replacing the module with two RY40PT5Ps using the ERNT-1AR51Y.
* 8: When the maximum load current is insufficient, consider replacing the module with two RY40PT5Ps using the ERNT-1AR51Y.
* 9: Set “Interrupt Settings” of “Module Parameter” in the sequence program.
* 10: For replacement, two MELSEC iQ-R series modules and two conversion adapters are required.
* 11: A conversion adapter for replacing the MELSEC-AnS series with the MELSEC-L series.

<2-slot type>

Input / Output	MELSEC-A series module model before replacement	MELSEC iQ-R series module model after replacement	Note	Conversion adapter: Model	Conversion adapter: Shape (No. of points/No. of pins): MELSEC-A series	Conversion adapter: Shape (No. of points/No. of pins): MELSEC iQ-R series	Conversion adapter: No. of input/output points	Page
Input	AX11	RX10 × 2 modules	*12	ERNT-1AR11X13Y	Terminal block (38 points)	Terminal block (18 points) ×2	32 points	1-12
	AX11EU							
Output	AY13	RY10R2 × 2 modules	*12, 13					
	AY13E							
	AY13EU							
	AY23	RY20S6 × 2 modules						
	AY10A, AY10A-UL	RY18R2A × 2 modules	*12	ERNT-1AR10AY				1-14
	AY11A							
	AY11AEU							
	AY40A		*12, 14					
	AY51, AY51-UL	RY40NT5P × 2 modules	*12	ERNT-1AR51Y				1-15
	AY51-S1							
	AY41, AY41-UL							
	AY41P							
	AY71		*12, 15					
	AY81	RY40PT5P × 2 modules	*12					
	AY81EP							

* 12: Since a 2-slot type module is replaced, two MELSEC iQ-R series modules are required.
* 13: Since the number of points per common differs, check the common terminal connection of the module before replacement.
* 14: The output type is changed from transistor output to contact output.
* 15: When a rated input voltage of 5VDC is used, change the voltage to 12VDC or 24VDC.

For Analog Modules

<1-slot type>

Input / Output	MELSEC-A series module model before replacement	iQ-R series module model after replacement	Note	Conversion adapter: Model	Conversion adapter: Shape (No. of points/No. of pins): MELSEC-A series	Conversion adapter: Shape (No. of points/No. of pins): MELSEC iQ-R series	Conversion adapter: No. of channels	Page
Input	A68AD (Voltage input)	R60ADV8	*16	ERNT-1AR68AD	Terminal block (38 points)	Terminal block (18 points)	8 channels	1-16
	A68AD (Current input)	R60ADI8						
	A68AD-S2 (Voltage input)	R60ADV8						
	A68AD-S2 (Current input)	R60ADI8						
	A68ADN (Voltage input)	R60ADV8	*16	ERNT-1AR68AN				1-17
	A68ADN (Current input)	R60ADI8						
Output	A62DA	R60DA4	*17, 18	ERNT-AQT62DA	Terminal block (20 points)		2 channels	1-18
	A62DA-S1							
	A68DAV	R60DAV8	*18	ERNT-AQT68DA	Terminal block (38 points)		8 channels	1-19
	A68DAI	R60DAI8						
	A68DAI-S1							

* 16: For the R60ADV8 and R60ADI8, voltage input and current input cannot be used together in a single module.
* 17: CH3 and CH4 on the R60DA4 cannot be used. (They are not connected inside the conversion adapter.)
* 18: A conversion adapter for replacing the MELSEC-A series with the MELSEC-Q series

<2-slot type>

Input / Output	MELSEC-A series module module model before replacement	MELSEC iQ-R series module model after replacement	Note	Conversion adapter: Model	Conversion adapter: Shape (No. of points/No. of pins): MELSEC-A series	Conversion adapter: Shape (No. of points/No. of pins): MELSEC iQ-R series	Conversion adapter: No. of channels	Page
Input	A616AD (Voltage input)	R60ADV8 × 2 modules	*19, 20	ERNT-1AR616AD	Terminal block (38 points)	Terminal block (18 points) ×2	16 channels	1-21
	A616AD (Current input)	R60ADI8 × 2 modules						
Output	A616DAV	R60DAV8 × 2 modules	*19, 20	ERNT-1AR616DA				1-22
	A616DAI	R60DAI8 × 2 modules						

* 19: Since a 2-slot type module is replaced, two MELSEC iQ-R series modules are required.
* 20: For the R60ADV8 and the R60ADI8, voltage input and current input cannot be used together in a single module. When CH0 to CH7 and CH8 to CHF on the existing module are used for both voltage and current inputs, this product cannot be used.

For High-speed Counter Modules

<1-slot type>

Input / Output	MELSEC-A series module model before replacement	MELSEC iQ-R series module model after replacement	Note	Conversion adapter				Page
				Model	Shape (No. of points/No. of pins)		No. of channels	
					MELSEC-A series	MELSEC iQ-R series		
Input	AD61 AD61-S1	RD62P2	*21	**ERNT-1AR61D**	Terminal block (38 points)	Connector (40P)	2 channels	**1-23**

* 21: When the CH1 side and the CH2 side use different external power supplies, change them to the same power supply.
For details on the connection, check the notes on the reference page.

2 Base Adapter

A MELSEC iQ-R series base unit can be mounted by using the mounting holes of the MELSEC-A series base unit.

Type	MELSEC-A series base unit model before replacement	MELSEC iQ-R series base unit model after replacement	Note	Model	Mountable conversion adapter support flange	Page
Main base unit	A38B, A38B-UL, A38HB A38HBEU, A38B-E	R312B	*1	**ERNT-AQB38N**	**ERNT-1AR12F**	**1-25**
		R38B			**ERNT-1AR8F**	
	A35B, A35B-UL, A35B-E	R38B		**ERNT-AQB35N**	**ERNT-1AR8F**	
		R35B			**ERNT-1AR5F**	
Extension base unit	A68B, A68B-UL	R612B		**ERNT-AQB68N**	**ERNT-1AR12F**	
		R68B			**ERNT-1AR8F**	
	A58B, A58B-UL	R68B	*1, 2	**ERNT-AQB58N**	**ERNT-1AR8F**	
	A65B, A65B-UL	R68B	*1	**ERNT-AQB65N**	**ERNT-1AR8F**	
		R65B			**ERNT-1AR5F**	
	A55B, A55B-UL	R65B	*1, 2	**ERNT-AQB55N**	**ERNT-1AR5F**	

*1: The ERNT-AQB** (products without "N" at the end of their model names) cannot be used.
*2: Since the base units in the MELSEC iQ-R series are always provided with a power supply, the extension base units with a power supply are the replacement target.

3 Conversion Adapter Support Flange

Model	Description	Remarks	Page
ERNT-1AR12F	12-slot conversion adapter support flange	When using a conversion adapter, the conversion adapter support flange is always required.	**1-26**
ERNT-1AR8F	8-slot conversion adapter support flange		
ERNT-1AR5F	5-slot conversion adapter support flange		

Conversion Adapter

Specifications

For Input/Output Modules

1-slot type

(1)ERNT-1AR10XY Terminal block (20 points) → Terminal block (18 points)

Model	MELSEC-A series module model	No. of input/output points	MELSEC iQ-R series module model
ERNT-1AR10XY	AX10, AX10-UL	16 points	RX10
	AX40, AX40-UL		RX40C7
	AX70, AX70-UL		
	AX80, AX80-UL		
	AX80E		
	AI61		
	AI61-S1		
	AY10		RY10R2
	AY11, AY11-UL		
	AY11E		
	AY11EEU		
	AY22		RY20S6

AX10/AX10-UL → RX10, and
AX40/AX40-UL/AX70/AX70-UL/
AX80/AX80-UL/AX80E/AI61/AI61-S1 → RX40C7

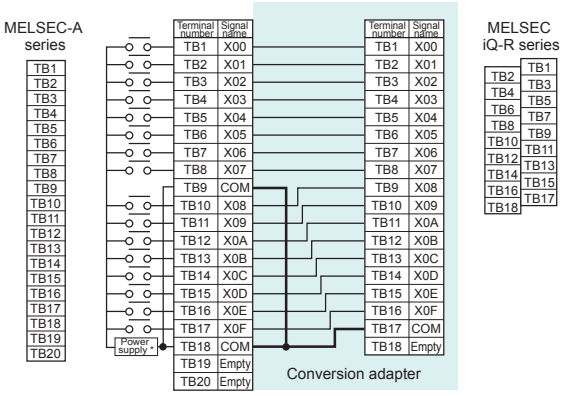

*Power supply

RX10	RX40C7
100/120VAC	24VDC

[Specification comparison chart]

Specifications \ Model		MELSEC-A series		MELSEC iQ-R series
		AX10	AX10-UL	RX10
No. of input points		16 points		16 points
Rated input voltage		100-120VAC 50/60Hz	110-120VAC 50/60Hz	100-120VAC 50/60Hz
Rated input current		10mA (100VAC, 60Hz)	11mA (110VAC) 12mA (120VAC)	8.2mA (100VAC, 60Hz) 6.8mA (100VAC, 50Hz)
Inrush current		Max. 300mA, 0.3ms or less (132VAC)		Max. 200mA, 1ms or less
ON voltage / ON current		80VAC or more / 6mA or more		80VAC or more / 5mA or more (50Hz, 60Hz)
OFF voltage / OFF current		40VAC or less / 4mA or less		30VAC or less / 1.7mA or less (50Hz, 60Hz)
Input impedance		Approx. 10kΩ (60Hz), Approx. 12kΩ (50Hz)		12.2kΩ (60Hz), 14.6kΩ (50Hz)
Response time	OFF→ON	15ms or less		15ms or less (100VAC 50Hz, 60Hz)
	ON→OFF	25ms or less		20ms or less (100VAC 50Hz, 60Hz)
Internal current consumption		55mA (TYP. all points ON)		110mA (TYP. all points ON)
Wiring method for common		16 points/common		16 points/common
External interface		20-point terminal block		18-point terminal block

1. Specifications in the ▭ areas differ between the MELSEC-A series and the MELSEC iQ-R series and are restricted when replacing.
   Check that the specifications of devices and equipment to be connected are satisfied.
2. For detailed specifications and general specifications not described in the specification comparison charts, refer to the user's manual for the module used.

[Specification comparison chart]

Specifications \ Model		MELSEC-A series								MELSEC iQ-R series
		AX40, AX40-UL (Sink type)		AX70, AX70-UL (Sink/Source type)			AX80, AX80-UL (Source type)		AX80E (Source type)		RX40C7 (Positive common/negative common shared type)
No. of input points		16 points		16 points			16 points		16 points		16 points
Rated input voltage		12VDC	24VDC	5VDC	12VDC	24VDC	12VDC	24VDC	12VDC	24VDC	24VDC
Rated input current		4mA	10mA	3.5mA (TYP) 5.5mA (MAX)	2mA (TYP) 3mA (MAX)	4.5mA (TYP) 6mA (MAX)	4mA	10mA	4mA	10mA	7.0mA (TYP)
ON voltage / ON current		9.5VDC or more / 3mA or more		(SW ON) 3.5VDC or more / 1.0mA or more (SW OFF) 5VDC or more / 1.0mA or more			9.5VDC or more / 3mA or more		9.5VDC or more / 2.6mA or more		15VDC or more / 4mA or more
OFF voltage / OFF current		6VDC or less / 1.5mA or less		(SW ON) 1.1VDC or less / 0.2mA or less (SW OFF) 2VDC or less / 0.2mA or less			6VDC or less / 1.5mA or less		6VDC or less / 1.0mA or less		8VDC or less / 2mA or less
Input resistance		Approx. 2.4kΩ		(SW ON) Approx. 1.4kΩ (SW OFF) Approx. 5.5kΩ			Approx. 2.4kΩ		Approx. 2.4kΩ		3.3kΩ
Response time	OFF→ON	10ms or less		1.5ms or less			10ms or less		0.5ms or less		0.1/0.2/0.4/0.6/ 1/5/10/20/70ms or less
	ON→OFF	10ms or less		3ms or less			10ms or less		10ms or less		0.1/0.2/0.4/0.6/ 1/5/10/20/70ms or less
Internal current consumption		55mA (TYP. all points ON)		55mA (TYP. all points ON)			55mA (TYP. all points ON)		55mA (TYP. all points ON)		110mA (TYP. all points ON)
Wiring method for common		8 points/common		8 points/common			8 points/common		8 points/common		16 points/common
External interface		20-point terminal block		20-point terminal block			20-point terminal block		20-point terminal block		18-point terminal block

Note 3. Since the number of points per common changes from 8 (two circuits) to 16, when terminal numbers TB9 and TB18 on the existing module are used separately from each other, change the wiring.
4. When a rated input voltage of 5VDC or 12VDC is used, change the voltage to 24VDC.
5. Specifications in the ▭ areas differ between the MELSEC-A series and the MELSEC iQ-R series and are restricted when replacing.
   Check that the specifications of devices and equipment to be connected are satisfied.
6. For detailed specifications and general specifications not described in the specification comparison charts, refer to the user's manual for the module used.

[Specification comparison chart]

Specifications \ Model		MELSEC-A series			MELSEC iQ-R series
		AI61		AI61-S1	RX40C7 (Positive common/negative common shared type)
No. of interrupt input points		16 points		16 points	16 points
Rated input voltage		12VDC	24VDC	24VDC	24VDC
Rated input current		6mA	14mA	14mA	7.0mA (TYP)
Operating voltage range		10.2VDC to 26.4VDC		21.6VDC to 26.4VDC	-
Maximum No. of simultaneous input points		100% (16/common) simultaneously ON		100% (16/common) simultaneously ON	-
ON voltage		9V or more		16V or more	-
OFF voltage		4V or less		9V or less	-
ON voltage / ON current		-		-	15VDC or more / 4mA or more
OFF voltage / OFF current		-		-	8VDC or less / 2mA or less
Input resistance		Approx. 2.4kΩ		Approx. 2.4kΩ	3.3kΩ
Response time	OFF→ON	0.2ms or less		2ms or more, 8ms or less	0.1/0.2/0.4/0.6/ 1/5/10/20/70ms or less
	ON→OFF	0.2ms or less		2ms or more, 8ms or less	0.1/0.2/0.4/0.6/ 1/5/10/20/70ms or less
No. of occupied points		32 points		32 points	16 points
Internal current consumption		140mA (TYP. all points ON)		140mA (TYP. all points ON)	110mA (TYP. all points ON)
Wiring method for common		16 points/common		16 points/common	16 points/common
External interface		20-point terminal block		20-point terminal block	18-point terminal block

Note 7. When replacing the AI61 with the RX40C7 and a rated input voltage of 12VDC is used, change the voltage to 24VDC.
8. Specifications in the ▭ areas differ between the MELSEC-A series and the MELSEC iQ-R series and are restricted when replacing. Check that the specifications of devices and equipment to be connected are satisfied.
9. For detailed specifications and general specifications not described in the specification comparison charts, refer to the user's manual for the module used.

• Note for programming
(1) Set "Interrupt Settings" of "Module Parameter" in the sequence program.

AY22 → RY20S6, and AY10/AY11/AY11-UL/AY11E/AY11EEU → RY10R2

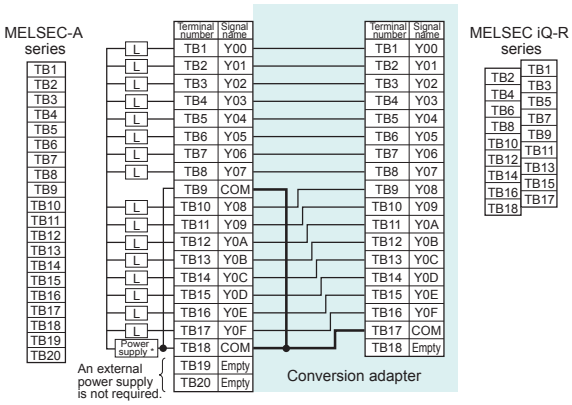

*Power supply

RY20S6	RY10R2
100/240VAC	24VDC or 240VAC

[Specification comparison chart]

Specifications \ Model		MELSEC-A series	MELSEC iQ-R series
		AY22	RY20S6
No. of output points		16 points	16 points
Rated load voltage		100-240VAC, 50/60Hz	100-240VAC, 50/60Hz
Maximum load current		2A/point, 3.3A/common	0.6A/point, 4.8A/common
Minimum load voltage/ current		24VAC 100mA, 100VAC 10mA, 240VAC 20mA	24VAC 100mA, 100VAC 25mA, 240VAC 25mA
Maximum inrush current		40A 10ms or less, 15A 100ms or less	20A one cycle or less
Leakage current at OFF		1.5mA (120VAC 60Hz), 3mA (240VAC 60Hz)	1.5mA or less (for 120V, 60Hz), 3mA or less (for 240V, 60Hz)
Maximum voltage drop at ON		1.5VAC or less (1 to 2A), 1.8VAC or less (0.2 to 1A), 5VAC or less (0.2A or less)	1.5VAC or less (for a load current of 0.6A)
Response time	OFF→ON	1ms or less	1ms + 0.5 cycle or less
	ON→OFF	0.5 cycle + 1ms or less	1ms + 0.5 cycle or less (rated load, resistive load)
Surge suppressor		CR absorber (0.022μF+47Ω), Varistor (387 to 473V)	CR absorber
Fuse		Yes	None (Installing a fuse per external wiring point is recommended.)
Internal current consumption		305mA (TYP. all points ON)	280mA (MAX. all points ON)
Wiring method for common		8 points/common	16 points/common
External interface		20-point terminal block	18-point terminal block

Note 10. Since the number of points per common changes from 8 (two circuits) to 16, when terminal numbers TB9 and TB18 on the existing module are used separately from each other, change the wiring.
11. Specifications in the ▭ areas differ between the MELSEC-A series and the MELSEC iQ-R series and are restricted when replacing. Check that the specifications of devices and equipment to be connected are satisfied.
12. For detailed specifications and general specifications not described in the specification comparison charts, refer to the user's manual for the module used.

[Specification comparison chart]

Specifications \ Model		MELSEC-A series				MELSEC iQ-R series
		AY10	AY11 AY11-UL	AY11E	AY11EEU	RY10R2
No. of output points		16 points	16 points	16 points	16 points	16 points
Rated switching voltage/ current		24VDC, 2A/point (Resistive load) 240VAC, 2A/point (COSφ = 1) 8A/common	24VDC, 2A/point (Resistive load) 240VAC, 2A/point (COSφ = 1) 8A/common	24VDC, 2A/point (Resistive load) 240VAC, 2A/point (COSφ = 1) 8A/common	24VDC, 2A/point (Resistive load) 24VAC, 2A/point (COSφ = 1) 8A/common	24VDC, 2A/point (Resistive load) 240VAC, 2A/point (COSφ = 1) 8A/common
Minimum switching load		5VDC 1mA	5VDC 1mA	5VDC 1mA	5VDC 1mA	5VDC 1mA
Maximum switching voltage		264VAC 125VDC	264VAC 125VDC	250VAC 125VDC	49.9VAC 74.9VDC	264VAC 125VDC
Leakage current at OFF		-	0.1mA (200VAC, 60Hz)	0.1mA (200VAC, 60Hz)	0.1mA (49.9VAC, 60Hz)	-
Response time	OFF→ON	10ms or less	10ms or less	10ms or less	10ms or less	10ms or less
	ON→OFF	12ms or less	12ms or less	12ms or less	12ms or less	12ms or less
Surge suppressor		None	Varistor (387 to 473V)	Varistor (387 to 473V)	Varistor (387 to 473V)	None
Fuse		None	None	Yes	Yes	None
Internal current consumption		115mA (TYP. all points ON)	115mA (TYP. all points ON)	115mA (TYP. all points ON)	115mA (TYP. all points ON)	450mA (TYP. all points ON)
Wiring method for common		8 points/common	8 points/common	8 points/common	8 points/common	16 points/common
External interface		20-point terminal block	20-point terminal block	20-point terminal block	20-point terminal block	18-point terminal block

Note 13. Since the number of points per common changes from 8 (two circuits) to 16, when terminal numbers TB9 and TB18 on the existing module are used separately from each other, change the wiring.
14. The external power supply connected to terminal numbers TB19 and TB20 on the existing terminal block is no longer required. However, since the wiring is not connected inside the conversion adapter, leaving the external power supply connected is not a problem.
15. Specifications in the ▭ areas differ between the MELSEC-A series and the MELSEC iQ-R series and are restricted when replacing. Check that the specifications of devices and equipment to be connected are satisfied.
16. For detailed specifications and general specifications not described in the specification comparison charts, refer to the user's manual for the module used.

(2)ERNT-1AR40Y Terminal block (20 points) → Terminal block (18 points)

Model	MELSEC-A series module model	No. of output points	MELSEC iQ-R series module model
ERNT-1AR40Y	AY40, AY40-UL	16 points	RY40NT5P
	AY40P		
	AY50, AY50-UL		
	AY70, AY70-UL		
	AY80		RY40PT5P
	AY80EP		

AY40/AY40-UL/AY40P/AY50/AY50-UL/AY70/AY70-UL → RY40NT5P

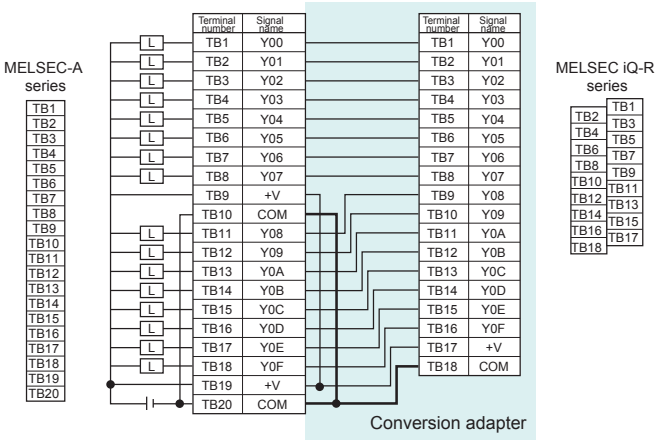

[Specification comparison chart]

Specifications \ Model		MELSEC-A series				MELSEC iQ-R series
		AY40, AY40-UL (Sink type)	AY40P (Sink type)	AY50, AY50-UL (Sink type)	AY70, AY70-UL (Sink type)	RY40NT5P (Sink type)
No. of output points		16 points	16 points	16 points	16 points	16 points
Rated load voltage		12/24VDC	12/24VDC	12/24VDC	5/12VDC	12/24VDC
Maximum load current		0.1A/point, 0.8A/common	0.1A/point, 0.8A/common	0.5A/point, 2A/common	16mA/point, 128mA/common	0.5A/point, 5A/common
Maximum inrush current		0.4A	0.38A, 5ms or less	7A 10ms or less, 3.5A 100ms or less	50mA, 10ms	1.5 to 3.5A/point (Current is restricted by overload protection function.)
Leakage current at OFF		0.1mA or less	0.1mA or less	0.1mA or less	V_{OH}: 3.5VDC (V_{cc} = 5VDC, I_{OH} = 0.4mA)	0.1mA or less
Maximum voltage drop at ON		2.5VDC (0.1A), 1.75VDC (5mA), 1.7VDC (1mA)	2.5VDC (0.1A), 1.75VDC (5mA), 1.7VDC (1mA)	0.9VDC (TYP.) 0.5A, 1.5VDC (MAX.) 0.5A	V_{OL}: 0.2VDC (I_{OL} = 16mA)	0.2VDC (TYP.) 0.5A, 0.3VDC (MAX.) 0.5A
Response time	OFF→ON	2ms or less	2ms or less	2ms or less	1ms or less	0.5ms or less
	ON→OFF	2ms or less (Resistive load)	2ms or less (Resistive load)	2ms or less (Resistive load)	1ms or less	1ms or less (Rated load,resistive load)
Surge suppressor		Clamp diode	Clamp diode	Varistor (52 to 62V)	None	Zener diode
Fuse		None	None	Yes	None	None
Protection function		None	Yes (Overheat protection, short-circuit protection)	None	None	Yes (Overheat protection, short-circuit protection)
Internal current consumption		115mA (TYP. all points ON)	115mA (TYP. all points ON)	115mA (TYP. all points ON)	100mA (TYP. all points ON)	140mA (TYP. all points ON)
Wiring method for common		8 points/common	8 points/common	8 points/common	8 points/common	16 points/common
External interface		20-point terminal block	20-point terminal block	20-point terminal block	20-point terminal block	18-point terminal block

AY80/AY80EP → RY40PT5P

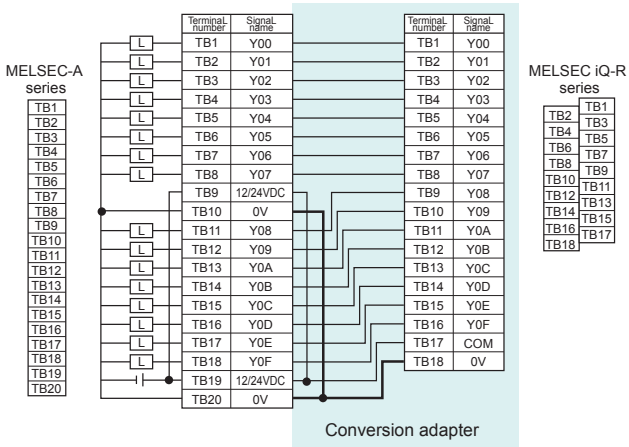

Specifications \ Model		MELSEC-A series		MELSEC iQ-R series
		AY80 (Source type)	AY80EP (Source type)	RY40PT5P (Source type)
No. of output points		16 points	16 points	16 points
Rated load voltage		12/24VDC	12/24VDC	12/24VDC
Maximum load current		0.5A/point, 2A/common	0.8A/point, 0.8A/point (60% ON, 55°C)	0.5A/point, 5A/common
Maximum inrush current		7A 10ms or less, 3.5A 100ms or less	No restriction (Short-circuit protection function)	1.5/point (Current is restricted by overload protection function.)
Leakage current at OFF		0.1mA or less	1mA or less	0.1mA or less
Maximum voltage drop at ON		1.5VDC (MAX.) 0.5A	1.1VDC (TYP.) 0.8A, 1.5VDC (MAX.) 0.8A	0.2VDC (TYP.) 0.5A, 0.3VDC (MAX.) 0.5A
Response time	OFF→ON	2ms or less	0.5ms or less	0.5ms or less
	ON→OFF	2ms or less (Resistive load)	1ms or less	1ms or less (Rated load, resistive load)
Surge suppressor		Varistor (52 to 62V)	Zener diode	Zener diode
Fuse		Yes	None	None
Protection function		None	Yes (Overheat protection, short-circuit protection)	Yes (Overheat protection, overload protection)
Internal current consumption		115mA (TYP. all points ON)	115mA (TYP. all points ON)	130mA (TYP. all points ON)
Wiring method for common		8 points/common	8 points/common	16 points/common
External interface		20-point terminal block	20-point terminal block	18-point terminal block

Note 1. Since the number of points per common changes from 8 (two circuits) to 16, when terminal numbers TB9 and TB19 as well as terminal numbers TB10 and TB20 on the existing module are used separately from each other, change the wiring.
2. When replacing the AY70 or the AY70-UL with the RY40NT5P and a rated input voltage of 5VDC is used, change the voltage to 12VDC or 24VDC.
3. Specifications in the ▭ areas differ between the MELSEC-A series and the MELSEC iQ-R series and are restricted when replacing.
Check that the specifications of devices and equipment to be connected are satisfied.
4. For detailed specifications and general specifications not described in the specification comparison charts, refer to the user's manual for the module used.

(3)ERNT-1AR41X Terminal block (38 points) → Connector (40P)

Conversion adapter model	MELSEC-A series module model	No. of input points	MELSEC iQ-R series module model
ERNT-1AR41X	AX31	32 points	RX41C4 RX41C6HS
	AX31-S1		
	AX41, AX41-UL		
	AX41-S1		
	AX81		
	AX81-S1		
	AX81-S3		
	AX71		RX41C4 RX41C6HS RX61C6HS

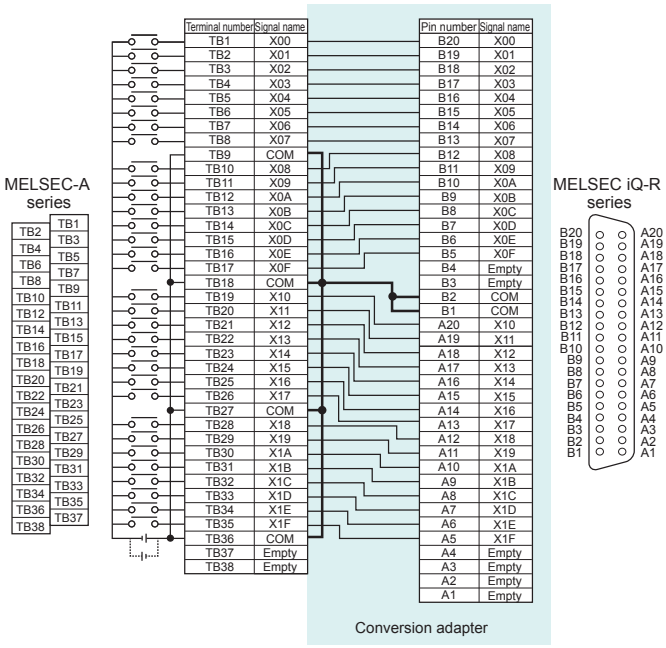

[Specification comparison chart]

Specifications \ Model		MELSEC-A series			MELSEC iQ-R series		
		AX71 (Sink/Source type)			RX41C4 (Positive common/negative common shared type)	RX41C6HS (Positive common/negative common shared type)	RX61C6HS (Positive common/negative common shared type)
No. of input points		32 points			32 points	32 points	32 points
Rated input voltage		5VDC	12VDC	24VDC	24VDC	24VDC	5VDC
Rated input current		3.5mA (TYP.) 5.5mA (MAX.)	2mA (TYP.) 3mA (MAX.)	4.5mA (TYP.) 6mA (MAX.)	4mA (TYP)	6.0mA (TYP)	6.0mA (TYP)
ON voltage/ ON current		(SW ON) 3.5VDC or more / 1.0mA or more (SW OFF) 5VDC or more / 1.0mA or more			19VDC or more / 3mA or more	19VDC or more / 4mA or more	3.5VDC or more / 3mA or more
OFF voltage/ OFF current		(SW ON) 1.1VDC or less / 0.2mA or less (SW OFF) 2VDC or less / 0.2mA or less			6VDC or less / 1.0mA or less	6VDC or less / 1.7mA or less	1VDC or less / 1mA or less
Input resistance		(SW ON) Approx. 1.4kΩ (SW OFF) Approx. 5.5kΩ			5.3kΩ	4kΩ	600Ω
Response time	OFF→ON	1.5ms or less			0.1/0.2/0.4/ 0.6/1/5/10/ 20/70ms or less	0.001/0.01/ 0.02/0.05/ 0.1/0.2/0.4/ 0.6/1/5/10/ 20/70ms or less	0.001/0.01/ 0.02/0.05/ 0.1/0.2/0.4/ 0.6/1/5/10/ 20/70ms or less
	ON→OFF	3ms or less			0.1/0.2/0.4/ 0.6/1/5/10/ 20/70ms or less	0.001/0.01/ 0.02/0.05/ 0.1/0.2/0.4/ 0.6/1/5/10/ 20/70ms or less	0.001/0.01/ 0.02/0.05/ 0.1/0.2/0.4/ 0.6/1/5/10/ 20/70ms or less
Internal current consumption		110mA (TYP. all points ON)			150mA (TYP. all points ON)	150mA (TYP. all points ON)	150mA (TYP. all points ON)
Wiring method for common		8 points/common			32 points/common	32 points/common	32 points/common
External interface		38-point terminal block			40-pin connector	40-pin connector	40-pin connector

Note 1. For replacement of the AX71 with the RX41C4, the RX41C6HS, or the RX61C6HS, since the number of points per common changes from 8 (four circuits) to 32, when the commons on the existing module are used separately from each other, change the wiring.
2. When a rated input voltage of 12VDC is used, change the voltage to 5VDC or 24VDC.
3. Specifications in the ▭ areas differ between the MELSEC-A series and the MELSEC iQ-R series and are restricted when replacing.
Check that the specifications of devices and equipment to be connected are satisfied.
4. For detailed specifications and general specifications not described in the specification comparison charts, refer to the user's manual for the module used.

[Specification comparison chart]

Specifications \ Model		MELSEC-A series															MELSEC iQ-R series	
		AX31 (AC/DC input type)			AX31-S1 (Sink/Source type)	AX41, AX41-UL (Sink type)		AX41-S1 (Sink type)		AX81 (Source type)		AX81-S1 (Sink/Source type)		AX81-S3 (Source type)		RX41C4 (Positive common/ negative common shared type)	RX41C6HS (Positive common/ negative common shared type)
No. of input points		32 points			32 points	32 points		32 points		32 points		32 points		32 points		32 points	32 points
Rated input voltage		12VDC	24VDC	12/24VAC (50/60Hz)	24VDC	12VDC	24VDC	12VDC	24VDC	12VDC	24VDC	12VDC	24VDC	12VDC	24VDC	24VDC	24VDC
Rated input current		4mA	8.5mA	4mA (12VAC) 8.5mA (24VAC)	8.5mA	4mA	10mA	4mA	10mA	4mA	10mA	2.5mA	5mA	4mA	10mA	4mA (TYP.)	6.0mA (TYP.)
ON voltage/ ON current		7VDC or more / 2mA or more			16VDC or more / 5mA or more	9.5VDC or more / 3mA or more		9.5VDC or more / 3mA or more		9.5VDC or more / 3mA or more		5.6VDC or more / 1.1mA or more		9.5VDC or more / 3mA or more		19VDC or more / 3mA or more	19VDC or more / 4mA or more
OFF voltage/ OFF current		2.5VDC or less / 0.7mA or less			8VDC or less / 2mA or less	6VDC or less / 1.5mA or less		6VDC or less / 1.5mA or less		6VDC or less / 1.5mA or less		2.4VDC or less / 0.39mA or less		6VDC or less / 1.5mA or less		6VDC or less / 1.0mA or less	6VDC or less / 1.7mA or less
Input resistance		Approx. 2.7kΩ			Approx. 2.7kΩ	Approx. 2.4kΩ		Approx. 2.4kΩ		Approx. 2.4kΩ		Approx. 4.8kΩ		Approx. 2.4kΩ		5.3kΩ	4kΩ
Response time	OFF→ON	20ms or less		25ms or less (12/24VAC 60Hz)	10ms or less	10ms or less		0.1ms or less		10ms or less		10ms or less		0.1ms or less		0.1/0.2/0.4/0.6/ 1/5/10/20/70ms or less	0.001/0.01/0.02/0.05/ 0.1/0.2/0.4/0.6/1/ 5/10/20/70ms or less
	ON→OFF	20ms or less		20ms or less (12/24VAC 60Hz)	10ms or less	10ms or less		0.2ms or less		10ms or less		10ms or less		0.2ms or less		0.1/0.2/0.4/0.6/ 1/5/10/20/70ms or less	0.001/0.01/0.02/0.05/ 0.1/0.2/0.4/0.6/1/ 5/10/20/70ms or less
Internal current consumption		110mA (TYP. all points ON)			110mA (TYP. all points ON)	110mA (TYP. all points ON)		110mA (TYP. all points ON)		110mA (TYP. all points ON)		105mA (TYP. all points ON)		110mA (TYP. all points ON)		150mA (TYP. all points ON)	150mA (TYP. all points ON)
Wiring method for common		32 points/common			32 points/ common	8 points/ common		8 points/ common		8 points/ common		8 points/ common		8 points/ common		32 points/common	32 points/common
External interface		38-point terminal block			38-point terminal block	38-point terminal block		38-point terminal block		38-point terminal block		38-point terminal block		38-point terminal block		40-pin connector	40-pin connector

Note 5. For replacement of the AX41, the AX41-UL, the AX41-S1, the AX81, the AX81-S1, or the AX81-S3 with the RX41C4 or the RX41C6HS, since the number of points per common changes from 8 (four circuits) to 32, when the commons on the existing module are used separately from each other, change the wiring.
6. When a rated input voltage of 12VAC, 24VAC, or 12VDC is used, change the voltage to 24VDC.
7. Specifications in the ▭ areas differ between the MELSEC-A series and the MELSEC iQ-R series and are restricted when replacing.
Check that the specifications of devices and equipment to be connected are satisfied.
8. For detailed specifications and general specifications not described in the specification comparison charts, refer to the user's manual for the module used.

(4)ERNT-1AR41Y Terminal block (38 points) → Connector (40P)

Model	MELSEC-A series module model	No. of output points	MELSEC iQ-R series module model
ERNT-1AR41Y	AY41, AY41-UL	32 points	RY41NT2P
	AY41P		
	AY71		
	AY81		RY41PT1P
	AY81EP		

AY41/AY41-UL/AY41P/AY71 → RY41NT2P

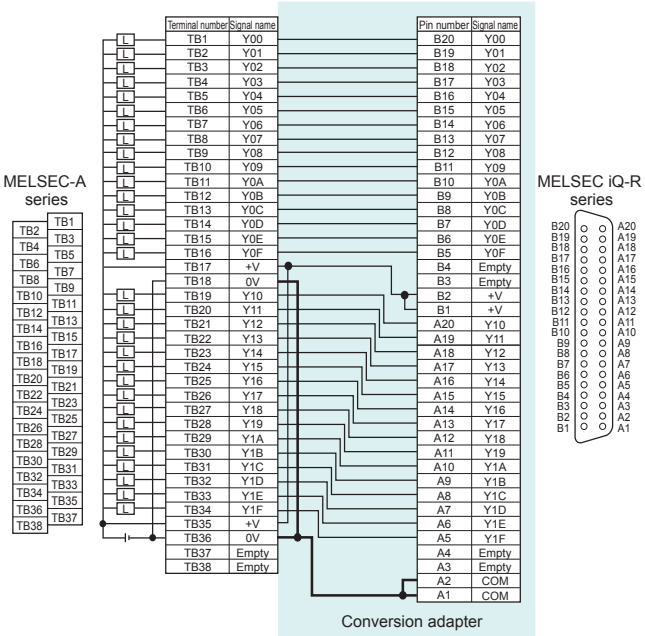

Terminal number	Signal name	Pin number	Signal name
TB1	Y00	B20	Y00
TB2	Y01	B19	Y01
TB3	Y02	B18	Y02
TB4	Y03	B17	Y03
TB5	Y04	B16	Y04
TB6	Y05	B15	Y05
TB7	Y06	B14	Y06
TB8	Y07	B13	Y07
TB9	Y08	B12	Y08
TB10	Y09	B11	Y09
TB11	Y0A	B10	Y0A
TB12	Y0B	B9	Y0B
TB13	Y0C	B8	Y0C
TB14	Y0D	B7	Y0D
TB15	Y0E	B6	Y0E
TB16	Y0F	B5	Y0F
TB17	+V	B4	Empty
TB18	0V	B3	Empty
TB19	Y10	B2	+V
TB20	Y11	B1	+V
TB21	Y12	A20	Y10
TB22	Y13	A19	Y11
TB23	Y14	A18	Y12
TB24	Y15	A17	Y13
TB25	Y16	A16	Y14
TB26	Y17	A15	Y15
TB27	Y18	A14	Y16
TB28	Y19	A13	Y17
TB29	Y1A	A12	Y18
TB30	Y1B	A11	Y19
TB31	Y1C	A10	Y1A
TB32	Y1D	A9	Y1B
TB33	Y1E	A8	Y1C
TB34	Y1F	A7	Y1D
TB35	+V	A6	Y1E
TB36	0V	A5	Y1F
TB37	Empty	A4	Empty
TB38	Empty	A3	Empty
		A2	COM
		A1	COM

[Specification comparison chart]

Specifications \ Model		MELSEC-A series			MELSEC iQ-R series
		AY41, AY41-UL (Sink type)	AY41P (Sink type)	AY71 (Sink type)	RY41NT2P (Sink type)
No. of output points		32 points	32 points	32 points	32 points
Rated load voltage		12/24VDC	12/24VDC	5/12VDC	12/24VDC
Maximum load current		0.1A/point, 1.6A/common	0.1A/point, 1.0A/common	16mA/point, 256mA/common (Sink load)	0.2A/point, 2A/common
Maximum inrush current		0.4A	0.38A, 5ms or less	50mA 10ms	1.5 to 3A/point (Current is restricted by overload protection function.)
Leakage current at OFF		0.1mA or less	0.1mA or less	-	0.1mA or less
Output voltage at OFF		-	-	V_{OH}: 3.5VDC (V_{cc} = 5VDC, I_{OH} = 0.4mA)	-
Maximum voltage drop at ON		2.5VDC (0.1A), 1.75VDC (5mA), 1.7VDC (1mA)	2.5VDC (0.1A), 1.75VDC (5mA), 1.7VDC (1mA)	V_{OL}: 0.2VDC (I_{OL} = 16mA)	0.2VDC (TYP.) 0.2A, 0.3VDC (MAX.) 0.2A
Response time	OFF→ON	2ms or less	2ms or less	1ms or less	0.5ms or less
	ON→OFF	2ms or less (Resistive load)	2ms or less (Resistive load)	1ms or less	1ms or less (Rated load, resistive load)
Surge suppressor		Clamp diode	Clamp diode	None	Zener diode
Fuse		None	None	None	None
Protection function		None	Yes (Overheat protection, short-circuit protection)	None	Yes (Overheat protection, overload protection)
Internal current consumption		230mA (TYP. all points ON)	230mA (TYP. all points ON)	200mA (TYP. all points ON)	180mA (TYP. all points ON)
Wiring method for common		16 points/common	16 points/common	16 points/common	32 points/common
External interface		38-point terminal block	38-point terminal block	38-point terminal block	40-pin connector

Note 1. Since the number of points per common changes from 16 (two circuits) to 32 (one circuit), when terminal numbers TB17 and TB35 as well as terminal numbers TB18 and TB36 on the existing module are used separately from each other, change the wiring.
2. When replacing the AY71 with the RY41NT2P and a rated voltage of 5VDC is used, change the voltage to 12VDC or 24VDC.
3. Specifications in the ▭ areas differ between the MELSEC-A series and the MELSEC iQ-R series and are restricted when replacing.
Check that the specifications of devices and equipment to be connected are satisfied.
4. For detailed specifications and general specifications not described in the specification comparison charts, refer to the user's manual for the module used.

AY81/AY81EP → RY41PT1P

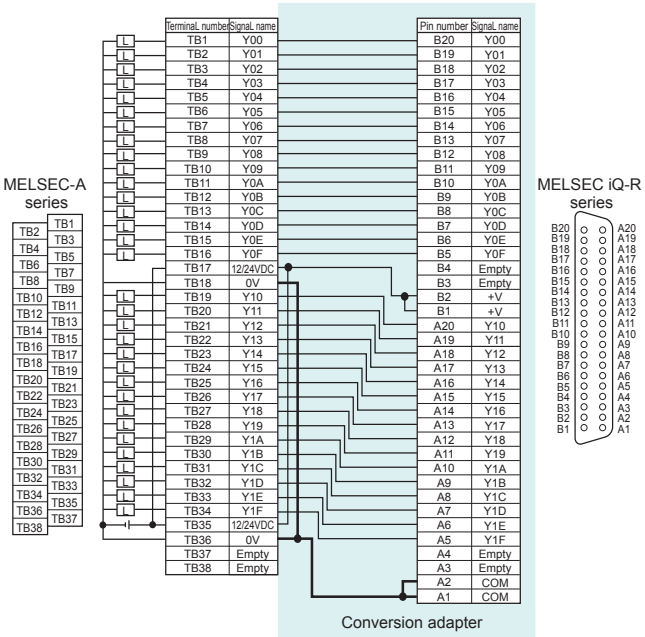

Terminal number	Signal name	Pin number	Signal name
TB1	Y00	B20	Y00
TB2	Y01	B19	Y01
TB3	Y02	B18	Y02
TB4	Y03	B17	Y03
TB5	Y04	B16	Y04
TB6	Y05	B15	Y05
TB7	Y06	B14	Y06
TB8	Y07	B13	Y07
TB9	Y08	B12	Y08
TB10	Y09	B11	Y09
TB11	Y0A	B10	Y0A
TB12	Y0B	B9	Y0B
TB13	Y0C	B8	Y0C
TB14	Y0D	B7	Y0D
TB15	Y0E	B6	Y0E
TB16	Y0F	B5	Y0F
TB17	12/24VDC	B4	Empty
TB18	0V	B3	Empty
TB19	Y10	B2	+V
TB20	Y11	B1	+V
TB21	Y12	A20	Y10
TB22	Y13	A19	Y11
TB23	Y14	A18	Y12
TB24	Y15	A17	Y13
TB25	Y16	A16	Y14
TB26	Y17	A15	Y15
TB27	Y18	A14	Y16
TB28	Y19	A13	Y17
TB29	Y1A	A12	Y18
TB30	Y1B	A11	Y19
TB31	Y1C	A10	Y1A
TB32	Y1D	A9	Y1B
TB33	Y1E	A8	Y1C
TB34	Y1F	A7	Y1D
TB35	12/24VDC	A6	Y1E
TB36	0V	A5	Y1F
TB37	Empty	A4	Empty
TB38	Empty	A3	Empty
		A2	COM
		A1	COM

[Specification comparison chart]

Specifications \ Model		MELSEC-A series		MELSEC iQ-R series
		AY81 (Source type)	AY81EP (Source type)	RY41PT1P (Source type)
No. of output points		32 points	32 points	32 points
Rated load voltage		12/24VDC	12/24VDC	12/24VDC
Maximum load current		0.5A/point, 4A/common	0.8A/point, 0.4A/point (60% ON, 55°C)	0.1A/point, 2A/common
Maximum inrush current		4A 10ms or less	No restriction (Short-circuit protection function)	1 to 3A/point (Current is restricted by overload protection function.)
Leakage current at OFF		0.1mA or less	1mA or less	0.1mA or less
Maximum voltage drop at ON		1.5VDC (MAX.) 0.5A	1.1V (TYP.) 0.8A, 1.5V (MAX.) 0.8A	0.1VDC (TYP.) 0.1A, 0.2VDC (MAX.) 0.1A
Response time	OFF→ON	2ms or less	0.5ms or less	0.5ms or less
	ON→OFF	2ms or less (Resistive load)	1.5ms or less	1ms or less (Rated load, resistive load)
Surge suppressor		Varistor (52 to 62V)	Surge absorbing diode	Zener diode
Fuse		None	None	None
Protection function		None	Yes (Overheat protection, short-circuit protection)	Yes (Overheat protection, overload protection)
Internal current consumption		230mA (TYP. all points ON)	230mA (TYP. all points ON)	190mA (TYP. all points ON)
Wiring method for common		16 points/common	16 points/common	32 points/common
External interface		38-point terminal block	38-point terminal block	40-pin connector

Note 5. Since the number of points per common changes from 16 (two circuits) to 32 (one circuit), when terminal numbers TB17 and TB35 as well as terminal numbers TB18 and TB36 on the existing module are used separately from each other, change the wiring. However, the wiring does not need to be changed when replacing the module with two RY40PT5Ps by using the ERNT-1AR51Y.
6. When the maximum load current is insufficient, consider replacing the module with two RY40PT5Ps using the ERNT-1AR51Y.
7. Specifications in the ▭ areas differ between the MELSEC-A series and the MELSEC iQ-R series and are restricted when replacing.
Check that the specifications of devices and equipment to be connected are satisfied.
8. For detailed specifications and general specifications not described in the specification comparison charts, refer to the user's manual for the module used.

(5)ERNT-ASLCXY81 D-Sub connector (37P) → Connector (40P)

Model	No. of required modules	MELSEC-A series module model	No. of input/output points	MELSEC iQ-R series module model	No. of required modules
ERNT-ASLCXY81	2 modules	AX82	64 points	RX41C4 RX41C6HS	2 modules
		AY82EP		RY41PT1P	

Note 1. A conversion adapter for replacing the MELSEC-AnS series with the MELSEC-L series

AX82 → RX41C4/RX41C6HS ×2

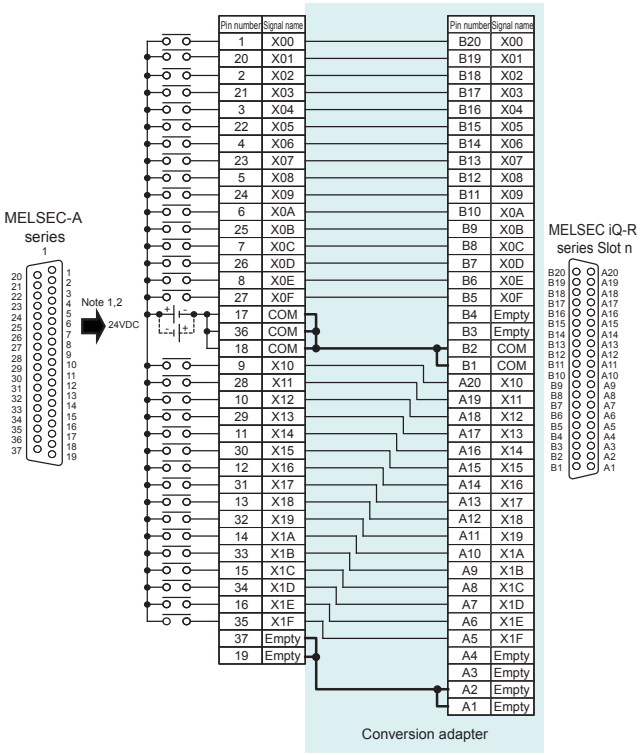

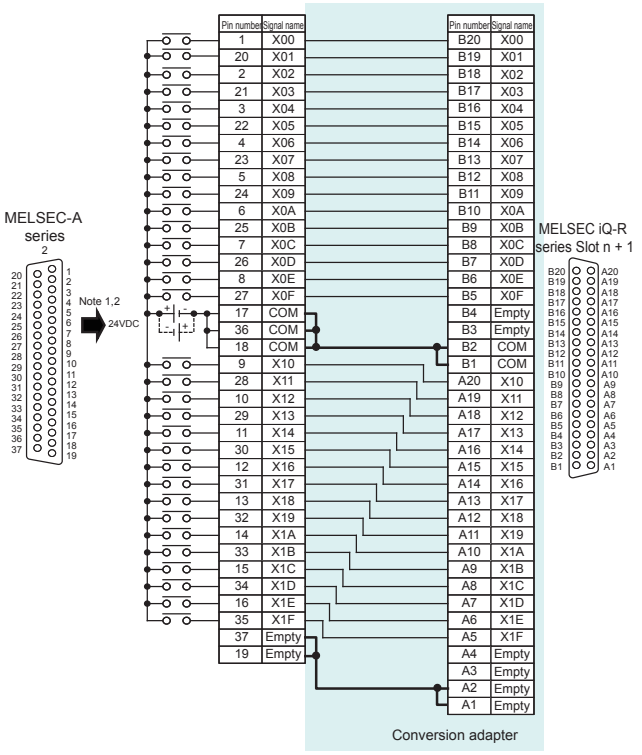

[Specification comparison chart]

Specifications \ Model		MELSEC-A series		MELSEC iQ-R series	
		AX82 (Source type)		RX41C4 (Positive common/ negative common shared type)	RX41C6HS (Positive common/negative common shared type)
No. of input points		64 points		32 points	32 points
Rated input voltage		12VDC	24VDC	24VDC	24VDC
Rated input current		3mA	7mA	4mA TYP.	6.0mA TYP.
ON voltage/ ON current		9.5VDC or more / 2.6mA or more		19V or more / 3mA or more	19V or more / 4mA or more
OFF voltage/ OFF current		6VDC or less / 1.0mA or less		6V or less / 1.0mA or less	6V or less / 1.7mA or less
Input resistance		Approx. 3.4kΩ		5.3kΩ	4kΩ
Response time	OFF→ON	10ms or less		0.1/0.2/0.4/ 0.6/1/5/10/ 20/70ms or less	0.001/0.01/0.02/ 0.05/0.1/0.2/0.4/0.6/ 1/5/10/20/70ms or less
	ON→OFF	10ms or less		0.1/0.2/0.4/ 0.6/1/5/10/ 20/70ms or less	0.001/0.01/0.02/ 0.05/0.1/0.2/0.4/0.6/ 1/5/10/20/70ms or less
Internal current consumption		120mA (TYP. all points ON)		150mA (TYP. all points ON)	150mA (TYP. all points ON)
Wiring method for common		32 points/common		32 points/common	32 points/common
External interface		37-pin D-Sub connector ×2		40-pin connector	40-pin connector

Note 2. When replacing the AX82 and a rated input voltage of 12VDC is used, change the voltage to 24VDC.
3. To replace with the RX41C4 or the RX41C6HS, prepare two sets of the RX41C4 or the RX41C6HS and two sets of conversion adapters (ERNT-ASLCXY81), and use 32 points on each set.
4. Specifications in the ▭ areas differ between the MELSEC-A series and the MELSEC iQ-R series and are restricted when replacing.
Check that the specifications of devices and equipment to be connected are satisfied.
5. For detailed specifications and general specifications not described in the specification comparison charts, refer to the user's manual for the module used.

AY82EP → RY41PT1P ×2

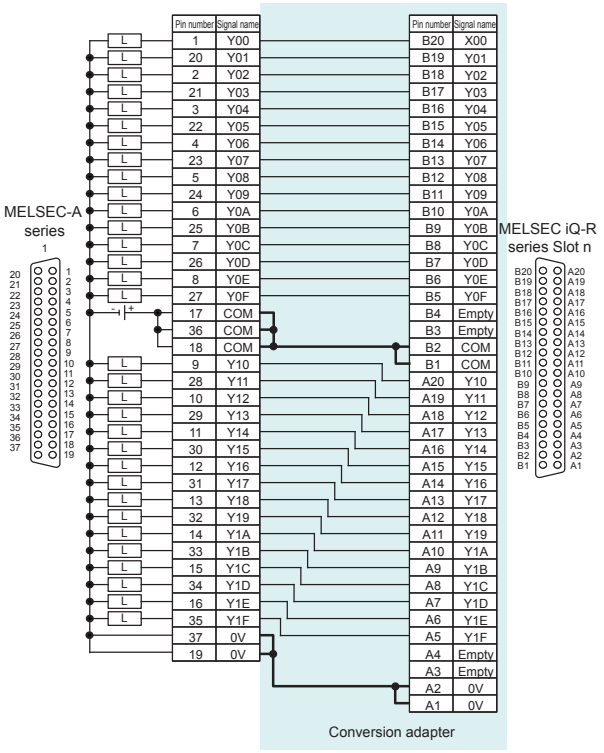

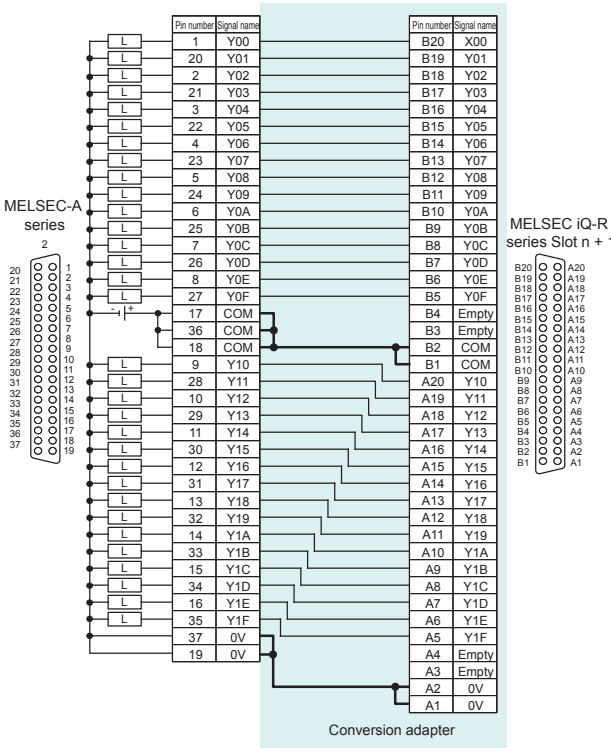

[Specification comparison chart]

Specifications \ Model		MELSEC-A series	MELSEC iQ-R series
		AY82EP (Source type)	RY41PT1P (Source type)
No. of output points		64 points	32 points
Rated load voltage		12/24VDC	12/24VDC
Maximum load current		0.1A/point 0.04A/point (60% ON, 55°C)	0.1A/point 2A/common
Maximum inrush current		No restriction (Short-circuit protection function)	Current is restricted by overload protection function.
Leakage current at OFF		0.1mA or less	0.1mA or less
Maximum voltage drop at ON		3.5V (0.1A) 2.5V (0.1A TYP.)	0.1VDC (TYP.) 0.1A 0.2VDC (MAX.) 0.1A
Response time	OFF→ON	0.5ms or less	0.5ms or less
	ON→OFF	1.5ms or less	1ms or less (Rated load, resistive load)
Surge suppressor		Surge absorbing diode	Zener diode
Fuse		None	None
Protection function		Yes (Overheat protection, short-circuit protection)	Yes (Overheat protection, overload protection)
Internal current consumption		290mA (TYP. all points ON)	190mA (TYP. all points ON)
Wiring method for common		32 points/common	32 points/common
External interface		37-pin D-Sub connector ×2	40-pin connector

Note 6. To replace with the RY41PT1P, prepare two sets of the RY41PT1P and two sets of conversion adapters (ERNT-ASLCXY81), and use 32 points on each set.
7. Specifications in the ▭ areas differ between the MELSEC-A series and the MELSEC iQ-R series and are restricted when replacing.
Check that the specifications of devices and equipment to be connected are satisfied.
8. For detailed specifications and general specifications not described in the specification comparison charts, refer to the user's manual for the module used.

2-slot type

(1)ERNT-1AR11X13Y Terminal block (38 points) → Terminal block (18 points) ×2

Model	MELSEC-A series module model	No. of input/ output points	MELSEC iQ-R series module model	MELSEC iQ-R series No. of required modules
ERNT-1AR11X13Y	AX11	32 points	RX10	2 modules
	AX11EU			
	AY13		RY10R2	
	AY13E			
	AY13EU			
	AY23		RY20S6	

AX11/AX11EU → RX10 ×2

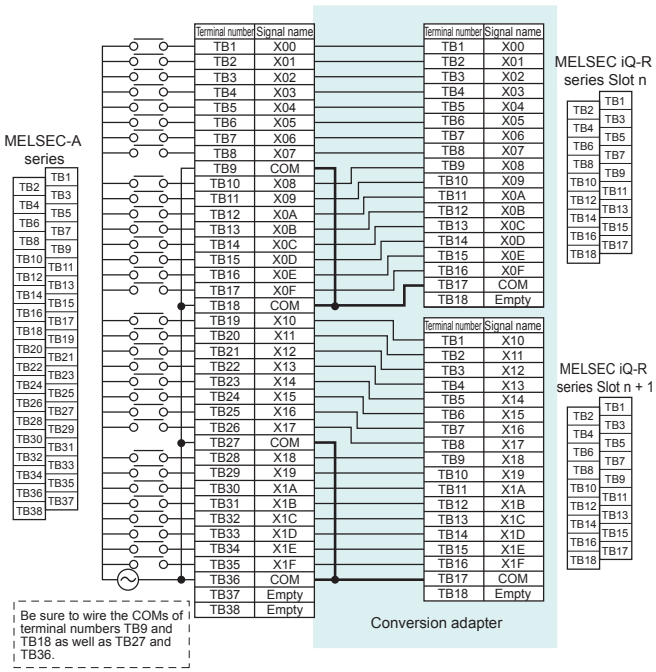

[Specification comparison chart]

Specifications \ Model		MELSEC-A series AX11	MELSEC-A series AX11EU	MELSEC iQ-R series RX10
No. of input points		32 points	32 points	16 points
Rated input voltage		100-120VAC 50/60Hz	100-120VAC 50/60Hz	100-120VAC 50/60Hz
Rated input current		10mA (100VAC, 60Hz)	12mA (120VAC, 60Hz)	8.2mA (100VAC, 60Hz) 6.8mA (100VAC, 50Hz)
Inrush current		Max. 300mA, 0.3ms or less (for 132VAC)	Max. 300mA, 1ms or less (for 132VAC)	Max. 200mA, 1ms or less
ON voltage / ON current		80VAC or more / 6mA or more	79VAC or more / 6mA or more	80VAC or more / 5mA or more (50Hz, 60Hz)
OFF voltage / OFF current		40VAC or less / 4mA or less	40VAC or less / 4mA or less	30VAC or less / 1.7mA or less (50Hz, 60Hz)
Input impedance		Approx. 10kΩ (60Hz), Approx. 12kΩ (50Hz)	Approx. 10kΩ (60Hz), Approx. 12kΩ (50Hz)	12.2kΩ (60Hz), 14.6kΩ (50Hz)
Response time	OFF→ON	15ms or less	15ms or less (100VAC, 60Hz)	15ms or less (100VAC 50Hz, 60Hz)
	ON→OFF	25ms or less	25ms or less (100VAC, 60Hz)	20ms or less (100VAC 50Hz, 60Hz)
Internal current consumption		110mA (TYP. all points ON)	150mA (TYP. all points ON)	110mA (TYP. all points ON)
Wiring method for common		32 points/common	32 points/common	16 points/common
External interface		38-point terminal block	38-point terminal block	18-point terminal block

Note 1. Be sure to wire the COMs of terminal numbers TB9 and TB18 as well as TB27 and TB36 of the MELSEC-A series side.
2. Specifications in the ▭ areas differ between the MELSEC-A series and the MELSEC iQ-R series and are restricted when replacing.
Check that the specifications of devices and equipment to be connected are satisfied.
3. For detailed specifications and general specifications not described in the specification comparison charts, refer to the user's manual for the module used.

AY13/AY13E/AY13EU → RY10R2 ×2

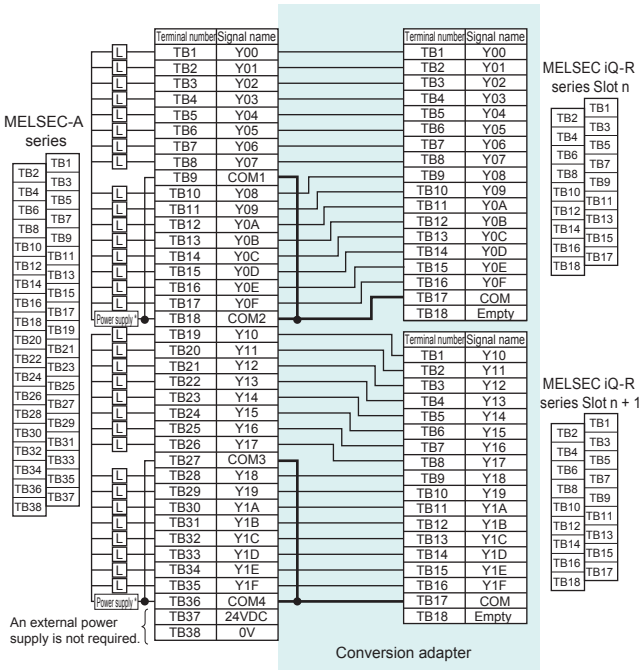

*Power supply

24VDC or 240VAC

[Specification comparison chart]

Specifications \ Model		MELSEC-A series			MELSEC iQ-R series
		AY13	AY13E	AY13EU	RY10R2
No. of output points		32 points	32 points	32 points	16 points
Rated switching voltage/current		24VDC, 2A/point (Resistive load) 240VAC, 2A/point (COSφ = 1) 5A/common	24VDC, 2A/point (resistive load) 240VAC, 2A/point (COSφ = 1) 5A/common	24VDC, 2A/point (Resistive load) 24VAC, 2A/point (COSφ = 1) 5A/common	24VDC, 2A/point (Resistive load) 240VAC, 2A/point (COSφ = 1) 8A/common
Minimum switching load		5VDC 1mA	5VDC 1mA	5VDC 1mA	5VDC 1mA
Maximum switching voltage		264VAC 125VDC	250VAC 125VDC	49.9VAC 74.9VDC	264VAC 125VDC
Leakage current at OFF		-	-	-	-
Response time	OFF→ON	10ms or less	10ms or less	10ms or less	10ms or less
	ON→OFF	12ms or less	12ms or less	12ms or less	12ms or less
Surge suppressor		None	None	None	None
Fuse		None	Yes	None	None
Internal current consumption		230mA (TYP. all points ON)	230mA (TYP. all points ON)	230mA (TYP. all points ON)	450mA (TYP. all points ON)
Wiring method for common		8 points/common	8 points/common	8 points/common	16 points/ common
External interface		38-point terminal block	38-point terminal block	38-point terminal block	18-point terminal block

Note 4. Since the number of points per common changes from 8 (four circuits) to two sets of 16 (one circuit), when terminal numbers TB9 and TB18 as well as terminal numbers TB27 and TB36 on the existing module are used separately from each other, change the wiring.

5. The external power supply connected to terminal numbers TB37 and TB38 on the existing terminal block is no longer required. However, since the wiring is not connected inside the conversion adapter, leaving the external power supply connected is not a problem.

6. Specifications in the ▭ areas differ between the MELSEC-A series and the MELSEC iQ-R series and are restricted when replacing.
Check that the specifications of devices and equipment to be connected are satisfied.

7. For detailed specifications and general specifications not described in the specification comparison charts, refer to the user's manual for the module used.

AY23 → RY20S6 ×2

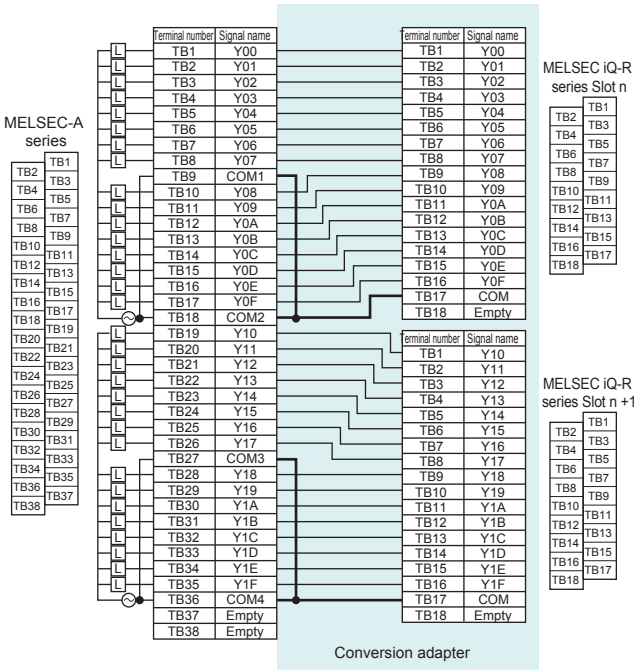

[Specification comparison chart]

Specifications \ Model		MELSEC-A series	MELSEC iQ-R series
		AY23	RY20S6
No. of output points		32 points	16 points
Rated load voltage		100-240VAC 40 to 70Hz	100-240VAC 50/60Hz (±3Hz)
Maximum load current		0.6A/point, 2.4A/common	0.6A/point, 4.8A/common
Minimum load voltage/current		24VAC 100mA, 100VAC 10mA, 240VAC 10mA	24VAC 100mA, 100VAC 25mA, 240VAC 25mA
Maximum inrush current		20A 10ms or less, 8A 100ms or less	20A one cycle or less
Leakage current at OFF		1.5mA (120VAC 60Hz), 3mA or less (240VAC 60Hz)	1.5mA or less (for 120VAC 60Hz), 3mA or less (for 240VAC 60Hz)
Maximum voltage drop at ON		1.5VAC or less (100 to 600mA), 1.8VAC or less (50 to 100mA), 2VAC or less (10 to 50mA)	1.5V or less (for a load current of 0.6A)
Response time	OFF→ON	1ms	1ms + 0.5 cycle or less
	ON→OFF	0.5 cycle + 1ms or less	1ms + 0.5 cycle or less (Rated load, resistive load)
Surge suppressor		CR absorber	CR absorber
Fuse		Yes	None (Installing a fuse per external wiring point is recommended.)
Internal current consumption		590mA (TYP. all points ON)	280mA (TYP. all points ON)
Wiring method for common		8 points/common	16 points/common
External interface		38-point terminal block	18-point terminal block

Note 8. Since the number of points per common changes from 8 (four circuits) to two sets of 16 (one circuit), when terminal numbers TB9 and TB18 as well as terminal numbers TB27 and TB36 on the existing module are used separately from each other, change the wiring.

9. Specifications in the ▭ areas differ between the MELSEC-A series and the MELSEC iQ-R series and are restricted when replacing.
Check that the specifications of devices and equipment to be connected are satisfied.

10. For detailed specifications and general specifications not described in the specification comparison charts, refer to the user's manual for the module used.

(2)ERNT-1AR10AY Terminal block (38 points) → Terminal block (18 points) ×2

Model	MELSEC-A series module model	No. of output points	MELSEC iQ-R series module model	MELSEC iQ-R series No. of required modules
ERNT-1AR10AY	AY10A, AY10A-UL	16 points	RY18R2A	2 modules
	AY11A			
	AY11AEU			
	AY40A			

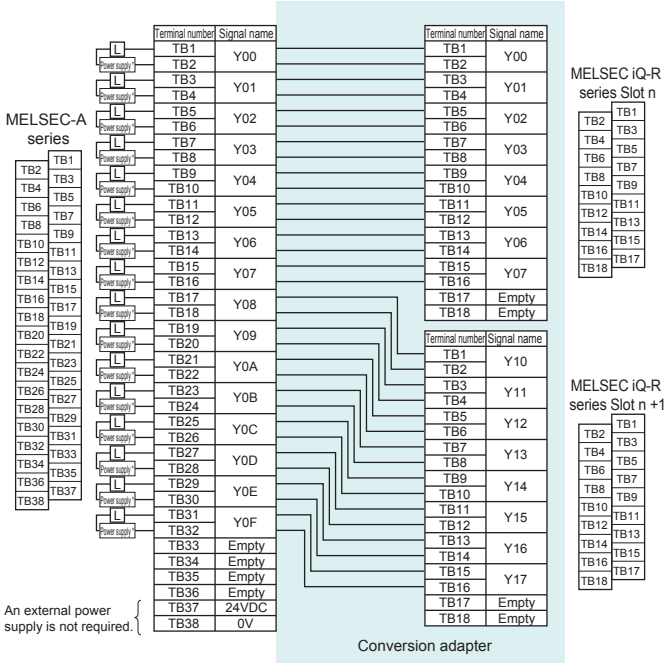

*Power supply

24VDC or 240VAC

[Specification comparison chart]

Specifications \ Model	MELSEC-A series				MELSEC iQ-R series
	AY10A AY10A-UL	AY11A	AY11AEU	AY40A	RY18R2A
No. of output points	16 points	16 points	16 points	16 points	8 points
Rated switching voltage/current	24VDC, 2A/point (Resistive load) 240VAC, 2A/point (COSφ = 1) 16A/all points	24VDC, 2A/point (Resistive load) 240VAC, 2A/point (COSφ = 1) 16A/all points	24VDC, 2A/point (Resistive load) 24VAC, 2A/point (COSφ = 1) 16A/all points	-	24VDC, 2A/point (Resistive load) 240VAC, 2A/point (COSφ = 1) 8A/module
Minimum switching load	5VDC 1mA	5VDC 1mA	5VDC 1mA	-	5VDC 1mA
Maximum switching voltage	264VAC 125VDC	264VAC 125VDC	49.9VAC 74.9VDC	-	264VAC 125VDC
Rated load voltage	-	-	-	12V/24VDC	-
Maximum load current	-	-	-	0.3A/point	-
Maximum inrush current	-	-	-	1A 100ms or less	-
Leakage current at OFF	-	0.1mA (200VAC, 60Hz)	0.1mA (49.9VAC, 60Hz)	0.1mA or less	-
Maximum voltage drop at ON	-	-	-	1.5VDC (50mA to 0.3A) 1.0VDC (50mA or less)	-
Response time OFF→ON	10ms or less	10ms or less	10ms or less	2ms or less	10ms or less
Response time ON→OFF	12ms or less	12ms or less	12ms or less	2ms or less (Load resistance)	12ms or less
Surge suppressor	None	Varistor (387 to 473V)	Varistor (387 to 473V)	Surge absorbing diode	None
Fuse	None	None	None	None	None
Internal current consumption	115mA (TYP. all points ON)	115mA (TYP. all points ON)	115mA (TYP. all points ON)	190mA (TYP. all points ON)	260mA (TYP. all points ON)
Wiring method for common	None (All points independent contacts)	None (All points independent contacts)	None (All points independent contacts)	None (All points independent contacts)	None (All points independent contacts)
No. of occupied points	16 points	16 points	16 points	16 points	16 points
External interface	38-point terminal block	38-point terminal block	38-point terminal block	38-point terminal block	18-point terminal block

Note 1. The external power supply connected to terminal numbers TB37 and TB38 on the existing terminal block is no longer required.
2. When replacing the AY40A with the RY18R2A, the output type is changed from transistor output to contact output. Check the specifications of the connected devices.
3. Specifications in the ▭ areas differ between the MELSEC-A series and the MELSEC iQ-R series and are restricted when replacing. Check that the specifications of devices and equipment to be connected are satisfied.
4. For detailed specifications and general specifications not described in the specification comparison charts, refer to the user's manual for the module used.

• Note for programming
(1) Since the RY18R2A is a 16-point occupied module, change the program so that the latter 8 points from Y08 to Y0F used in the AY10A, the AY10A-UL, the AY11A, the AY11AEU, or the AY40A become points from Y10 to Y17.

(3)ERNT-1AR51Y Terminal block (38 points) → Terminal block (18 points) ×2

Model	MELSEC-A series module model	No. of output points	MELSEC iQ-R series module model	MELSEC iQ-R series No. of required modules
ERNT-1AR51Y	AY51, AY51-UL	32 points	RY40NT5P	2 modules
	AY51-S1			
	AY41, AY41-UL			
	AY41P			
	AY71			
	AY81		RY40PT5P	
	AY81EP			

AY51/AY51-UL/AY51-S1/AY41/AY41-UL/AY41P/AY71 → RY40NT5P ×2

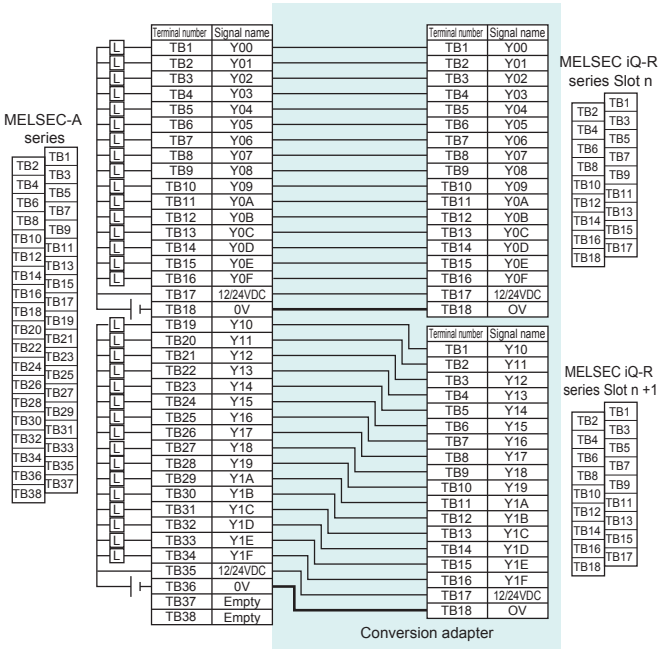

AY81/AY81EP → RY40PT5P ×2

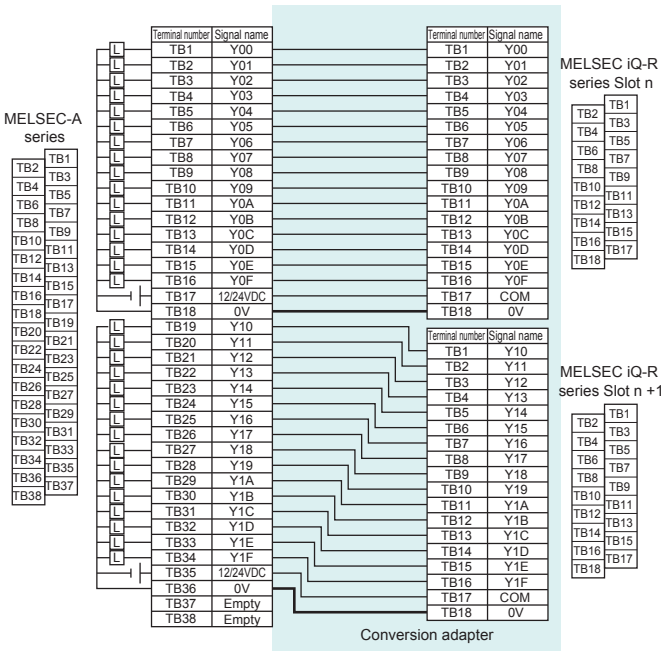

[Specification comparison chart]

Specifications \ Model		MELSEC-A series AY51, AY51-UL (Sink type)	MELSEC-A series AY51-S1 (Sink type)	MELSEC iQ-R series RY40NT5P (Sink type)
No. of output points		32 points	32 points	16 points
Rated load voltage		12/24VDC	12/24VDC	12/24VDC
Maximum load current		0.5A/point, 4A/common	0.3A/point, 2A/common (1A/fuse common)	0.5A/point, 5A/common
Maximum inrush current		4A 10ms or less	3A 10ms or less	1.5 to 3.5A/point (Current is restricted by overload protection function.)
Leakage current at OFF		0.1mA or less	0.1mA or less	0.1mA or less
Maximum voltage drop at ON		0.9VDC (TYP.) 0.5A, 1.5VDC (MAX.) 0.5A	1VDC (TYP.) 0.3A, 1.5VDC (MAX.) 0.3A	0.2VDC (TYP.) 0.5A, 0.3VDC (MAX.) 0.5A
Response time	OFF→ON	2ms or less	2ms or less	0.5ms or less
	ON→OFF	2ms or less (Resistive load)	2ms or less (Resistive load)	1ms or less (Rated load, resistive load)
Surge suppressor		Varistor (52 to 62V)	Transistor built-in zener diode	Zener diode
Fuse		None	Yes	None
Internal current consumption		230mA (TYP. all points ON)	310mA (TYP. all points ON)	140mA (TYP. all points ON)
Wiring method for common		16 points/common	16 points/common	16 points/common
External interface		38-point terminal block	38-point terminal block	18-point terminal block

Specifications \ Model		MELSEC-A series AY41, AY41-UL (Sink type)	MELSEC-A series AY41P (Sink type)	MELSEC-A series AY71 (Sink type)	MELSEC iQ-R series RY40NT5P (Sink type)
No. of output points		32 points	32 points	32 points	16 points
Rated load voltage		12/24VDC	12/24VDC	5/12VDC	12/24VDC
Maximum load current		0.1A/point 1.6A/common	0.1A/point 1.0A/common	16mA/point 256mA/common (Sink load)	0.5A/point 5A/common
Maximum inrush current		0.4A	0.38A, 5ms or less	50mA 10ms	Current is restricted by overload protection function.
Leakage current at OFF		0.1mA or less	0.1mA or less	-	0.1mA or less
Output voltage at OFF		-	-	V_{OH}: 3.5VDC (V_{CC} = 5VDC, I_{OH} = 0.4mA)	-
Maximum voltage drop at ON		2.5VDC (0.1A) 1.75VDC (5mA) 1.7VDC (1mA)	2.5VDC (0.1A) 1.75VDC (5mA) 1.7VDC (1mA)	V_{OL}: 0.2VDC (I_{OL} = 16mA)	0.2VDC (TYP.) 0.5A 0.3VDC (MAX.) 0.5A
Response time	OFF→ON	2ms or less	2ms or less	1ms or less	0.5ms or less
	ON→OFF	2ms or less (Resistive load)	2ms or less (Resistive load)	1ms or less	1ms or less (Rated load, resistive load)
Surge suppressor		Clamp diode	Clamp diode	None	Zener diode
Fuse		None	None	None	None
Internal current consumption		230mA (TYP. all points ON)	230mA (TYP. all points ON)	200mA (TYP. all points ON)	140mA (TYP. all points ON)
Wiring method for common		16 points/ common	16 points/ common	16 points/ common	16 points/ common
External interface		38-point terminal block	38-point terminal block	38-point terminal block	18-point terminal block

Specifications \ Model		MELSEC-A series AY81 (Source type)	MELSEC-A series AY81EP (Source type)	MELSEC iQ-R series RY40PT5P (Source type)
No. of output points		32 points	32 points	16 points
Rated load voltage		12/24VDC	12/24VDC	12/24VDC
Maximum load current		0.5A/point, 4A/common	0.8A/point, 0.4A/point (60% ON, 55°C)	0.5A/point, 5A/common
Maximum inrush current		4A 10ms or less	No restriction (Short-circuit protection)	1.5A/point (Current is restricted by overload protection function.)
Leakage current at OFF		0.1mA or less	1mA or less	0.1mA or less
Maximum voltage drop at ON		1.5VDC (MAX.) 0.5A	1.1V (TYP.) 0.8A 1.5V (MAX.) 0.8A	0.2VDC (TYP.) 0.5A 0.3VDC (MAX.) 0.5A
Response time	OFF→ON	2ms or less	0.5ms or less	0.5ms or less
	ON→OFF	2ms or less (Resistive load)	1.5ms or less	1ms or less (Rated load, resistive load)
Surge suppressor		Varistor (52 to 62V)	Surge absorbing diode	Zener diode
Fuse		None	None	None
Protection function		None	Yes (Overheat protection, short-circuit protection)	Yes (Overheat protection, overload protection)
Internal current consumption		230mA (TYP. all points ON)	230mA (TYP. all points ON)	130mA (TYP. all points ON)
Wiring method for common		16 points/common	16 points/common	16 points/common
External interface		38-point terminal block	38-point terminal block	18-point terminal block

Note 1. When replacing the AY71 with the RY40NT5P and a rated voltage of 5VDC is used, change the voltage to 12VDC or 24VDC.
2. Specifications in the ▭ areas differ between the MELSEC-A series and the MELSEC iQ-R series and are restricted when replacing.
Check that the specifications of devices and equipment to be connected are satisfied.
3. For detailed specifications and general specifications not described in the specification comparison charts, refer to the user's manual for the module used.

For Analog Modules

1-slot type

(1)ERNT-1AR68AD Terminal block (38 points) → Terminal block (18 points)

Model	MELSEC-A series module model	No. of channels	MELSEC iQ-R series module model
ERNT-1AR68AD	A68AD (Voltage input)	8 channels	R60ADV8
	A68AD (Current input)		R60ADI8
	A68AD-S2 (Voltage input)		R60ADV8
	A68AD-S2 (Current input)		R60ADI8

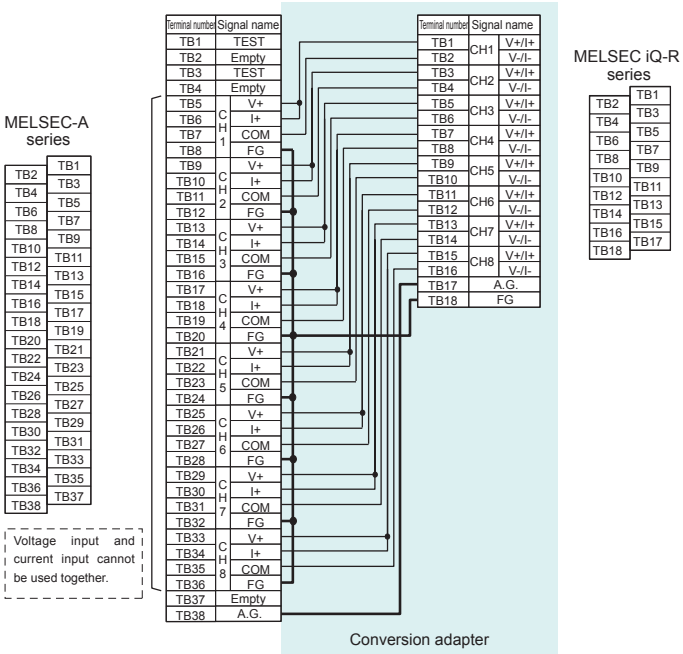

[Specification comparison chart]

Specifications \ Model		MELSEC-A series		MELSEC iQ-R series		
		A68AD, A68AD-S2		R60ADV8	R60ADI8	
Analog input	Voltage	-10 to 0 to 10VDC (Input resistance hardware version K or later: 1MΩ, hardware version J or earlier: 30kΩ)		-10 to 10VDC (Input resistance: 1MΩ)	-	
	Current	4 to 20mA DC (Input resistance: 250Ω)		-	0 to 20mA DC (Input resistance: 250Ω)	
Digital output		ACPU: 16-bit signed binary (-2048 to 2047) K2ACPU: sign + 16-bit binary (±2047)		16-bit signed binary (-32768 to 32767)		
I/O characteristics		Analog input	Digital output	Analog input range	Digital output	Resolution
		+10V	+2000	Voltage: 0 to 10V	0 to 32000	312.5μV
		+5V or +20mA	+1000	Voltage: 0 to 5V		156.3μV
		0V or +4mA	±0	Voltage: 1 to 5V		125.0μV
		-5V or -12mA	-1000	Voltage: 1 to 5V (Extended mode)	-8000 to 32000	125.0μV
		-10V	-2000	Voltage: -10 to 10V	-32000 to 32000	312.5μV
				Voltage: User range setting		47.7μV
Maximum resolution		Voltage 5mV (1/2000) Current 20μA (1/1000)		Current: 0 to 20mA	0 to 32000	625.0nA
				Current: 4 to 20mA		500.0nA
				Current: 4 to 20mA (Extended mode)	-8000 to 32000	500.0nA
				Current: User range setting	-32000 to 32000	190.7nA
Overall accuracy		±1.0% (±20)		Ambient temperature 25±5°C: ±0.1% (±32digit) or less Ambient temperature 0 to 55°C: ±0.3% (±96digit) or less		
Maximum conversion speed		Max. 2.5ms/channel		80μs/channel		
Absolute maximum input	Voltage	±15V		±15V	-	
	Current	±30mA		-	30mA	
No. of analog input points		8 channels/module		8 channels/module		
Isolation method	Between input terminal and power supply of programmable controller	Photocoupler		Photocoupler		
	Between channels	Non-isolation		Non-isolation		
No. of occupied points		32 points		16 points		
External interface		38-point terminal block		18-point terminal block		
Current consumption		Hardware version K or later: 0.39A Hardware version J or earlier: 0.9A		0.23A	0.22A	

Note 1. For the R60ADV8 and the R60ADI8, voltage input and current input cannot be used together in a single module.
2. The R60ADV8 and the R60ADI8 do not have an offset/gain setting terminal. For details on the offset/gain setting, refer to the user's manual for the R60ADV8 and the R60ADI8.
3. Specifications in the ▭ areas differ between the MELSEC-A series and the MELSEC iQ-R series and are restricted when replacing.
Check that the specifications of devices and equipment to be connected are satisfied.
4. For detailed specifications and general specifications not described in the specification comparison charts, refer to the user's manual for the module used.

• Notes for programming
(1) Since the assignment of the input/output signals (X, Y) and buffer memory addresses differs between the A68AD/A68AD-S2 and the R60ADV8/R60ADI8, change the sequence program accordingly.
(2) Compared to the A68AD and the A68AD-S2, the conversion speed of the R60ADV8 and the R60ADI8 is faster. For that reason, noise that was not picked up by the A68AD or the A68AD-S2 may be picked up by the R60ADV8 and the R60ADI8 as analog signals. In such cases, use the averaging processing function to eliminate the influence of noise.

(2)ERNT-1AR68AN Terminal block (38 points) → Terminal block (18 points)

Model	MELSEC-A series module model	No. of channels	MELSEC iQ-R series module model
ERNT-1AR68AN	A68ADN (Voltage input)	8 channels	R60ADV8
	A68ADN (Current input)		R60ADI8

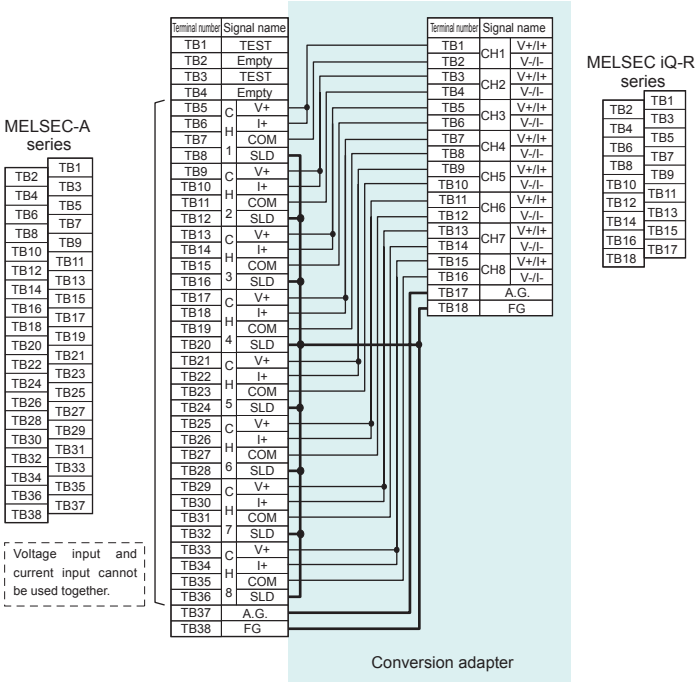

[Specification comparison chart]

Specifications \ Model		MELSEC-A series				MELSEC iQ-R series			
		A68ADN				R60ADV8		R60ADI8	
Analog input	Voltage	-10 to 0 to 10VDC (Input resistance: 1MΩ)				-10 to 10VDC (Input resistance: 1MΩ)		-	
	Current	-20mA to 0 to 20mA (Input resistance: 250Ω)				-		0 to 20mA DC (Input resistance: 250Ω)	
Digital output		16-bit signed binary When 1/4000 is set: -4096 to 4095 When 1/8000 is set: -8192 to 8191 When 1/12000 is set: -12288 to 12287				16-bit signed binary (-32768 to 32767)			
I/O characteristics		Analog input	Digital output value (With a 5V/20mA gain and 0V/0mA offset)			Analog input range		Digital output	Resolution
			When 1/4000 is set	When 1/8000 is set	When 1/12000 is set	Voltage	0 to 10V	0 to 32000	312.5μV
							0 to 5V		156.3μV
		10V	4000	8000	12000		1 to 5V		125.0μV
		5V or 20mA	2000	4000	6000		1 to 5V (Extended mode)	-8000 to 32000	125.0μV
		0V or 0mA	0	0	0		-10 to 10V	-32000 to 32000	312.5μV
		-5V or -12mA	-2000	-4000	-6000		User range setting		47.7μV
		-10V	-4000	-8000	-12000	Current	0 to 20mA	0 to 32000	625.0nA
Maximum resolution			When 1/4000 is set	When 1/8000 is set	When 1/12000 is set		4 to 20mA		500.0nA
		Voltage input	2.5mV	1.25mV	0.83mV		4 to 20mA (Extended mode)	-8000 to 32000	500.0nA
		Current input	10μA	5μA	3.33μA		User range setting	-32000 to 32000	190.7nA
Overall accuracy		±1.0% 1/4000: ±40 1/8000: ±80 1/12000: ±120				Ambient temperature 25±5°C: ±0.1% (±32digit) or less Ambient temperature 0 to 55°C: ±0.3% (±96digit) or less			
Maximum conversion speed		20ms/channel				80μs/channel			
Absolute maximum input	Voltage	±15V				±15V		-	
	Current	±30mA				-		±30mA	
No. of analog input points		8 channels/module				8 channels/module			
Isolation method	Between input terminal and power supply of programmable controller	Photocoupler				Photocoupler			
	Between channels	Non-isolation				Non-isolation			
No. of occupied points		32 points				16 points			
External interface		38-point terminal block				18-point terminal block			
Current consumption		0.4A				0.23A		0.22A	

Note 1. For the R60ADV8 and the R60ADI8, voltage input and current input cannot be used together in a single module.
2. The R60ADV8 and the R60ADI8 do not have an offset/gain setting terminal. For details on the offset/gain setting, refer to the user's manual for the R60ADV8 and the R60ADI8.
3. Specifications in the ▭ areas differ between the MELSEC-A series and the MELSEC iQ-R series and are restricted when replacing.
Check that the specifications of devices and equipment to be connected are satisfied.
4. For detailed specifications and general specifications not described in the specification comparison charts, refer to the user's manual for the module used.

• Notes for programming

(1) Since the assignment of the input/output signals (X, Y) and buffer memory addresses differs between the A68ADN and the R60ADV8/R60ADI8, change the sequence program accordingly.

(2) Compared to the A68ADN, the conversion speed of the R60ADV8 and the R60ADI8 is faster. For that reason, noise that was not picked up by the A68ADN may be picked up by the R60ADV8 and the R60ADI8 as analog signals. In such cases, use the averaging processing function to eliminate the influence of noise.

(3)ERNT-AQT62DA Terminal block (20 points) → Terminal block (18 points)

Model	MELSEC-A series module model	No. of channels	MELSEC iQ-R series module model
ERNT-AQT62DA	A62DA	2 channels	R60DA4
	A62DA-S1		

Note 1. A conversion adapter for replacing the MELSEC-A series with the MELSEC-Q series

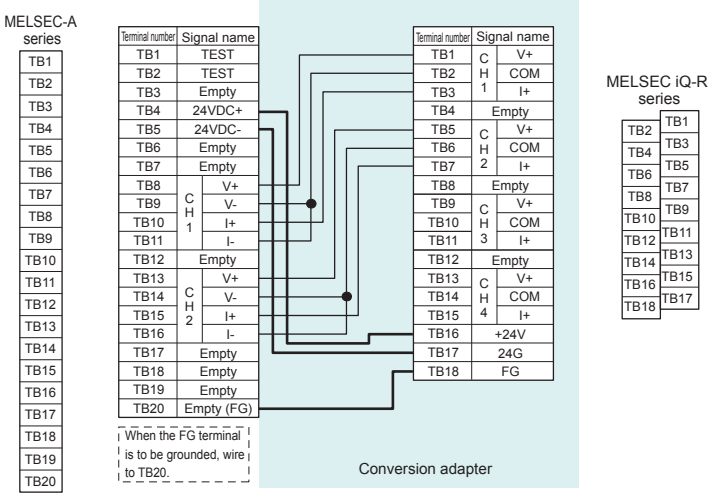

[Specification comparison chart]

Item \ Model		MELSEC-A series A62DA	MELSEC-A series A62DA-S1	MELSEC iQ-R series R60DA4
Digital input		16-bit signed binary (Voltage: -2000 to 2000, Current: -1000 to 1000)	16-bit signed binary (0 to 4000)	16-bit signed binary (-32768 to 32767)
Analog output	Voltage	-10 to 0 to 10VDC (External load resistance value: 500Ω to 1MΩ)	0 to 10VDC (External load resistance value: 500Ω to 1MΩ)	-10 to 10VDC (External load resistance value: 1kΩ or more) 0 to 5VDC (External load resistance value: 500Ω or more)
	Current	4 to 20mA DC (External load resistance value: 0Ω to 600Ω)	4 to 20mA DC (External load resistance value: 0Ω to 600Ω)	0 to 20mA DC (External load resistance value: 0Ω to 600Ω)

I/O characteristics (A62DA):

Digital input	Analog output: Voltage	Analog output: Current
2000	10V	-
1000	5V	20mA
0	0V	4mA
-1000	-5V	-12mA
-2000	-10V	-

I/O characteristics (A62DA-S1):

Output range	Digital input	Analog output
0 to 10V	4000	10V
	0	0V
0 to 5V 0 to 20mA	4000	5V or 20mA
	0	0V or 0mA
1 to 5V 4 to 20mA	4000	5V or 20mA
	0	1V or 4mA

I/O characteristics (R60DA4):

	Analog output range	Digital value	Resolution
Voltage	0 to 5V	0 to 32000	156.3μV
	1 to 5V		125.0μV
	-10 to 10V	-32000 to 32000	312.5μV
	User range setting (Voltage)		312.5μV
Current	0 to 20mA	0 to 32000	625.0nA
	4 to 20mA		500.0 nA
	User range setting (current)	-32000 to 32000	350.9 nA

Item	A62DA	A62DA-S1	R60DA4
Maximum resolution	Voltage: 5mV (1/2000) Current: 20μA (1/1000)	Voltage 1 to 5V: 1mV (1/4000) 0 to 5V: 1.25mV (1/4000) 0 to 10V: 2.5mV (1/4000) Current 4 to 20mA: 4μA (1/4000) 0 to 20mA: 5μA (1/4000)	
Overall accuracy	±1.0% (Voltage: ±0.1V Current: ±0.2mA)		Ambient temperature 25±5°C: ±0.1% or less (Voltage: ±10mV, Current: ±20μA) Ambient temperature 0 to 55°C: ±0.3% or less (Voltage: ±30mV, Current: ±60μA)

Overall accuracy (A62DA-S1):

Temperature range \ Output range	1 to 5V	0 to 5V	0 to 10V	4 to 20mA	0 to 20mA
25°C (±0.5% or less)	±25mV	±25mV	±50mV	±0.1mA	±0.1mA
0 to 55°C (±1% or less)	±50mV	±50mV	±100mV	±0.2mA	±0.2mA

Item		A62DA	A62DA-S1	R60DA4
Maximum conversion speed		15ms or less/2 channels (One channel is also the same length of time.)	15ms or less/2 channels (One channel is also the same length of time.)	80μs/channel
Absolute maximum output	Voltage	±12V	0 to 12V	-
	Current	±28mA	0 to 28mA	-
No. of analog output points		2 channels/module	2 channels/module	4 channels/module
Isolation method	Between output terminal and power supply of programmable controller	Photocoupler	Photocoupler	Photocoupler
	Between channels	Non-isolation	Non-isolation	Non-isolation
	Between external power supply and analog output	-	-	Transformer
No. of occupied points		32 points	32 points	16 points
External interface		20-point terminal block	20-point terminal block	18-point terminal block
Current consumption		0.60A	0.60A	0.16A
External power supply	Voltage	21.6 to 26.4VDC	21.6 to 26.4VDC	24VDC +20%, -15%
	Current	0.35A	0.35A	0.14A

Note 2. To ground the FG terminal (terminal number TB18) on the R60DA4, use terminal number TB20 on the existing terminal block.

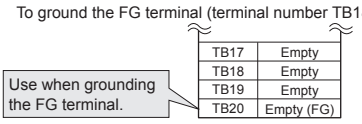

3. The R60DA4 does not have an offset/gain setting terminal. For details on the offset/gain setting, refer to the user's manual for the R60DA4.
4. CH3 and CH4 on the R60DA4 cannot be used. (They are not connected inside the conversion adapter.)
5. Specifications in the ▭ areas differ between the MELSEC-A series and the MELSEC iQ-R series and are restricted when replacing. Check that the specifications of devices and equipment to be connected are satisfied.
6. For detailed specifications and general specifications not described in the specification comparison charts, refer to the user's manual for the module used.

• Note for programming
(1) Since the assignment of the input/output signals (X, Y) and buffer memory addresses differs between the A62DA/A62DA-S1 and the R60DA4, change the sequence program accordingly.

(4)ERNT-AQT68DA Terminal block (38 points) → Terminal block (18 points)

Model	MELSEC-A series module model	No. of input/ output points	MELSEC iQ-R series module model
ERNT-AQT68DA	A68DAV	8 channels	R60DAV8
	A68DAI		R60DAI8
	A68DAI-S1		

Note 1. A conversion adapter for replacing the MELSEC-A series with the MELSEC-Q series

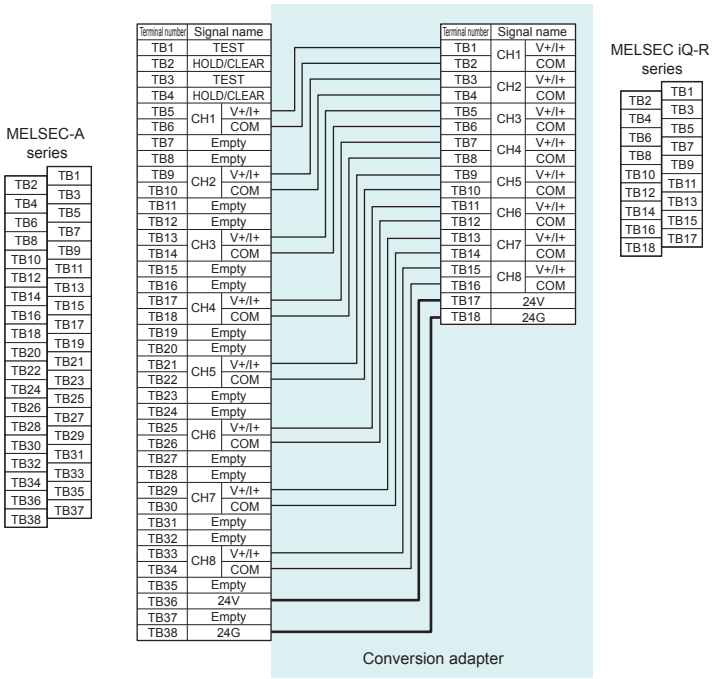

[Specification comparison chart]

Specifications \ Model		MELSEC-A series				MELSEC iQ-R series			
		A68DAV				R60DAV8			
Digital input		16-bit signed binary (-4000 to 4000, -8000 to 8000, -12000 to 12000)				16-bit signed binary (-32768 to 32767)			
Analog output		-10 to 0 to 10VDC (External load resistance value: 2kΩ to 1MΩ)				-10 to 10VDC (External load resistance value: 1kΩ or more) 0 to 5VDC (External load resistance value: 500Ω or more)			
I/O characteristics		Digital value resolution			Analog output value	Analog output range		Digital value	Resolution
		1/4000	1/8000	1/12000		Voltage	0 to 5V	0 to 32000	156.3μV
	Digital input value	4000	8000	12000	10V		1 to 5V		125.0μV
		2000	4000	6000	5V		-10V to 10V	-32000 to 32000	312.5μV
		0	0	0	0V		User range setting (Voltage)		312.5μV
		-2000	-4000	-6000	-5V				
		-4000	-8000	-12000	-10V				
Maximum resolution		2.5mV (1/4000) 1.25mV (1/8000) 0.83mV (1/12000)							
Overall accuracy		±1.0% (±100mV)				Ambient temperature 25±5°C: ±0.1% or less (Voltage: ±10mV) Ambient temperature 0 to 55°C: ±0.3% or less (Voltage: ±30mV)			
Maximum conversion speed		40ms or less/8 channels (One channel is also the same length of time.)				80μs/channel			
Absolute maximum output		-12 to 12V				-			
No. of analog output points		8 channels/module				8 channels/module			
Isolation method	Between output terminal and power supply of programmable controller	Photocoupler				Photocoupler			
	Between channels	Non-isolation				Non-isolation			
	Between external power supply and analog output	-				Transformer			
No. of occupied points		32 points				16 points			
External interface		38-point terminal block				18-point terminal block			
Current consumption		0.15A				0.16A			
External power supply Power supply	Voltage	21.6 to 26.4VDC				24VDC +20%, -15%			
	Current	0.2A				0.16A			

Specifications \ Model		MELSEC-A series				MELSEC iQ-R series			
		A68DAI, A68DAI-S1				R60DAI8			
Digital input		16-bit signed binary (0 to 4000, 0 to 8000, 0 to 12000)				16-bit signed binary (-32768 to 32767)			
Analog output		0 to 20mA DC (External load resistance value: 0Ω to 600Ω)				0 to 20mA DC (External load resistance value: 0Ω to 600Ω)			
I/O characteristics		Digital value resolution			Analog output value	Analog output range		Digital value	Resolution
		1/4000	1/8000	1/12000		Current	0 to 20mA	0 to 32000	625.0nA
	Digital input value	4000	8000	12000	20mA				
		2000	4000	6000	12mA		4 to 20mA		500.0nA
		0	0	0	4mA				
Maximum resolution		5.0μA (1/4000) 2.5μA (1/8000) 1.6μA (1/12000)					User range setting (Voltage)	-32000 to 32000	350.9nA
Overall accuracy		±1.0% (±200μA)				Ambient temperature 25±5°C: ±0.1% or less (Current: ±20μA) Ambient temperature 0 to 55°C: ±0.3% or less (Current: ±60μA)			
Maximum conversion speed		40ms/8 channels (One channel is also the same length of time.)				80μs/channel			
Absolute maximum output		0 to 28mA				-			
No. of analog output points		8 channels/module				8 channels/module			
Isolation method	Between output terminal and power supply of programmable controller	Photocoupler				Photocoupler			
	Between channels	Non-isolation				Non-isolation			
	Between external power supply and analog output	-				Transformer			
No. of occupied points		32 points				16 points			
External interface		38-point terminal block				18-point terminal block			
Current consumption		0.15A				0.16A			
External power supply Power supply	Voltage	21.6 to 26.4VDC				24VDC +20%, -15%			
	Current	0.4A				0.26A			

Note 2. The R60DAV8 and the R60DAI8 do not have an offset/gain setting terminal. For details on the offset/gain setting, refer to the user's manual for the R60DAV8 and the R60DAI8.
3. Changes of the sequence program (the number of occupied I/O points, the I/O signals, and the buffer memory address) are necessary.
4. Specifications in the ▭ areas differ between the MELSEC-A series and the MELSEC iQ-R series and are restricted when replacing.
Check that the specifications of devices and equipment to be connected are satisfied.
5. For detailed specifications and general specifications not described in the specification comparison charts, refer to the user's manual for the module used.

•Note for programming
(1) Since the assignment of the input/output signals (X, Y) and buffer memory addresses differs between the A68DAV/A68DAI/A68DAI-S1 and the R60DAV8/R60DAI8, change the sequence program accordingly.

2-slot type

(1)ERNT-1AR616AD Terminal block (38 points) → Terminal block (18 points) ×2

Model	MELSEC-A series module model	No. of channels	MELSEC iQ-R series module model	No. of required modules
ERNT-1AR616AD	A616AD (Voltage input)	16 channels	R60ADV8	2 modules
	A616AD (Current input)		R60ADI8	

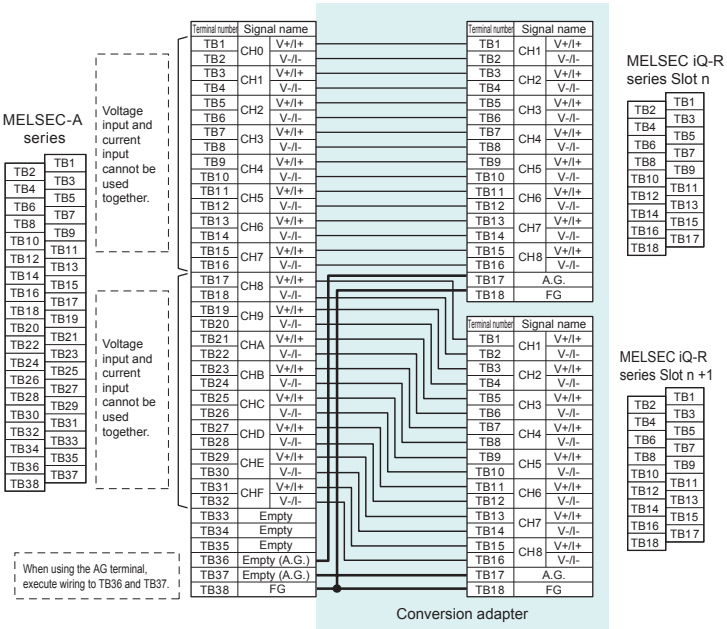

Note 1. To ground the AG terminal (terminal number TB17) on the R60ADV8 or the R60ADI8, use terminal numbers TB36 or TB37 on the existing terminal block.

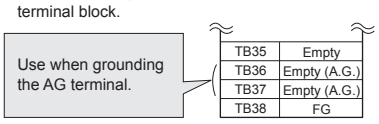

2. The R60ADV8 and the R60ADI8 do not have an offset/gain setting terminal. For details on the offset/gain setting, refer to the user's manual for the R60ADV8 and the R60ADI8.
3. For the R60ADV8 and the R60ADI8, voltage input and current input cannot be used together in a single module. When CH0 to CH7 and CH8 to CHF on the existing module are used for both voltage and current inputs, this product cannot be used.
4. For detailed specifications and general specifications not described in the specification comparison charts, refer to the user's manual for the module used.

[Specification comparison chart]

Specifications \ Model		MELSEC-A series				MELSEC iQ-R series			
		A616AD				R60ADV8		R60ADI8	
Analog input	Voltage	-10 to 0 to 10VDC (Input resistance: 1MΩ)				-10 to 10VDC (Input resistance: 1MΩ)		-	
	Current	-20mA to 0 to 20mA (Input resistance: 250Ω)				-		0 to 20mA DC (Input resistance: 250Ω)	
Digital output		16-bit (12-bit for the data portion) signed binary (-48 to 4047, -2048 to 2047) Configurable for each channel				16-bit signed binary (-32768 to 32767)			
I/O characteristics and maximum resolution		Input	Analog input range	Maximum resolution	Digital output value	Analog input range		Digital output	Resolution
		Voltage	0 to 10	2.5mV (1/4000)	0 to 4000 -2000 to 2000	Voltage	0 to 10V	0 to 32000	312.5μV
			0 to 5	1.25mV (1/4000)			0 to 5V		156.3μV
			1 to 5	1.0mA (1/4000)			1 to 5V		125.0μV
			-10 to 10	5.0mV (1/4000)			1 to 5V (Extended mode)	-8000 to 32000	125.0μV
			-5 to 5	2.5mV (1/4000)			-10 to 10V	-32000 to 32000	312.5μV
		Current (mA)	0 to 20	10μA (1/4000)	0 to 2000 -2000 to 0		User range setting		47.7μV
			0 to 20	5μA (1/4000)	0 to 4000 -2000 to 2000	Current	0 to 20mA	0 to 32000	625.0nA
			4 to 20	4μA (1/4000)			4 to 20mA		500.0nA
			-20 to 20	20μA (1/2000)	1000 to 3000 -1000 to 1000		4 to 20mA (Extended mode)	-8000 to 32000	500.0nA
			-20 to 20	10μA (1/4000)	0 to 4000 -2000 to 2000		User range setting	-32000 to 32000	190.7nA
Overall accuracy		0 to 10V, -10 to 10V -5V to 5V, -20mA to 20mA] ±0.3% (Digital value ±12)				Ambient temperature 25±5°C: ±0.1% (±32digit) or less Ambient temperature 0 to 55°C: ±0.3% (±96digit) or less			
		0 to 5V, 1 to 5V 0mA to 20mA, 4mA to 20mA] ±0.6% (Digital value ±24)							
Maximum conversion speed		1ms/channel				80μs/channel			
Absolute maximum input	Voltage	±15V				±15V		-	
	Current	±30mA				-		30mA	
No. of analog input points		16 channels/module				8 channels/module			
Isolation method	Between input terminal and power supply of programmable controller	Photocoupler				Photocoupler			
	Between channels	Non-isolation				Non-isolation			
No. of occupied points		32 points				16 points			
External interface		38-point terminal block				18-point terminal block			
Current consumption		1A				0.23A		0.22A	

• Notes for programming

(1) Since the assignment of the input/output signals (X, Y) and buffer memory addresses differs between the A616AD and the R60ADV8/R60ADI8, change the sequence program accordingly.

(2) Compared to the A616AD, the conversion speed of the R60ADV8 and the R60ADI8 is faster. For that reason, noise that was not picked up by the A616AD may be picked up by the R60ADV8 and the R60ADI8 as analog signals. In such cases, use the averaging processing function to eliminate the influence of noise.

(2)ERNT-1AR616DA Terminal block (38 points) → Terminal block (18 points) ×2

Model	MELSEC-A series module model	No. of channels	MELSEC iQ-R series module model	MELSEC iQ-R series No. of required modules
ERNT-1AR616DA	A616DAV	16 channels	R60DAV8	2 modules
	A616DAI		R60DAI8	

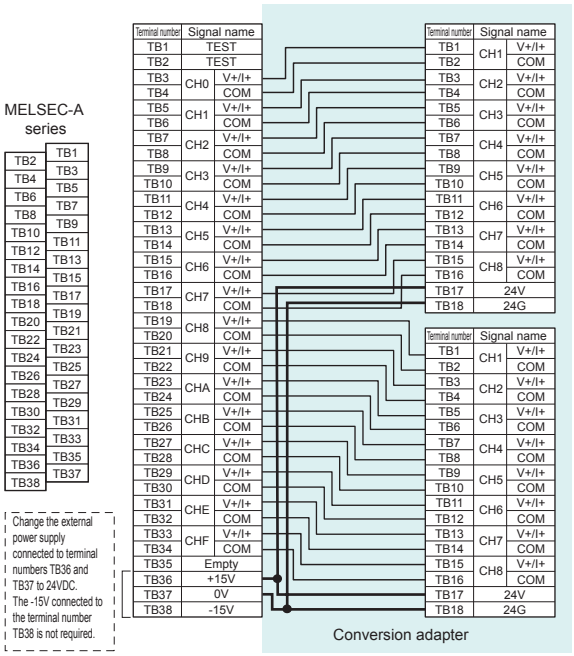

Note 1. Change the external power supply connected to terminal numbers TB36 and TB37 on the existing terminal block to 24VDC.

2. The R60DAV8 and the R60DAI8 do not have an offset/gain setting terminal. For details on the offset/gain setting, refer to the user's manual for the R60DAV8 and the R60DAI8.

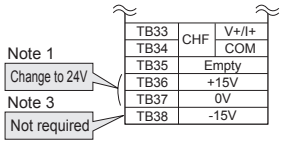

3. The -15V power supply that was connected to terminal number TB38 on the existing terminal block is not required.

4. Specifications in the ▭ areas differ between the MELSEC-A series and the MELSEC iQ-R series and are restricted when replacing.
Check that the specifications of devices and equipment to be connected are satisfied.

5. For detailed specifications and general specifications not described in the specification comparison charts, refer to the user's manual for the module used.

[Specification comparison chart]

Specifications \ Model		MELSEC-A series A616DAV			MELSEC iQ-R series R60DAV8		
Digital input		16-bit signed binary (-4096 to 4095)			16-bit signed binary (-32768 to 32767)		
Analog output		When the output voltage range setting is 10V -10 to 0 to 10V (External load resistance value: 2kΩ to 1MΩ) When the output voltage range setting is 5V -5 to 0 to 5V (External load resistance value: 2kΩ to 1MΩ)			-10 to 10VDC (External load resistance value: 1kΩ or more) 0 to 5VDC (External load resistance value: 500Ω or more)		
I/O characteristics		Digital input	Analog output		Analog output range		Digital value / Resolution
			When 5V is set	When 10V is set	Voltage	0 to 5V	0 to 32000 / 156.3μV
		4000	5V	10V		1 to 5V	0 to 32000 / 125.0μV
		2000	2.5V	5V		-10 to 10V	-32000 to 32000 / 312.5μV
		0	0V	0V		User range setting (Voltage)	-32000 to 32000 / 312.5μV
		-2000	-2.5V	-5V			
		-4000	-5V	-10V			
		Maximum resolution: 1/4000					
Overall accuracy		Output voltage range setting	10V	5V	Ambient temperature 25±5°C: ±0.1% or less (Voltage: ±10mV) Ambient temperature 0 to 55°C: ±0.3% or less (Voltage: ±30mV)		
		Ambient temperature (0 to 55°C)	±0.6% (±60mV)	±0.6% (±30mV)			
		Ambient temperature (25°C)	±0.3% (±30mV)	±0.3% (±15mV)			
Maximum conversion speed		0.5ms (-10V→10V/10V→-10V conversion time)			80μs/channel		
Absolute maximum output		15V			-		
No. of analog output points		16 channels/module			8 channels/module		
Isolation method	Between output terminal and power supply of programmable controller	Photocoupler			Photocoupler		
	Between channels	Non-isolation			Non-isolation		
	Between external power supply and analog output	-			Transformer		
No. of occupied points		32 points			16 points		
External interface		38-point terminal block			18-point terminal block		
Current consumption		0.38A			0.16A		
External power supply Power supply	Voltage	15VDC/ - 15VDC			24VDC +20%, -15%		
	Current	15VDC: 0.2A / -15VDC: 0.17A			0.16A		

Specifications \ Model		MELSEC-A series		MELSEC iQ-R series			
		A616DAI		R60DAI8			
Digital input		16-bit signed binary (0 to 4095)		16-bit signed binary (-32768 to 32767)			
Analog output		0 to 20mA DC (External load resistance value: 0Ω to 600Ω)		0 to 20mA DC (External load resistance value: 0Ω to 600Ω)			
I/O characteristics		Digital input	Analog output	Analog output range		Digital value	Resolution
		4000	20mA	Current	0 to 20mA	0 to 32000	625.0nA
		2000	12mA		4 to 20mA		500.0nA
		0	4mA		User range setting (Current)	-32000 to 32000	350.9nA
		Maximum resolution: 1/4000					
Overall accuracy		±0.6% ±0.3% when the ambient temperature is 25°C		Ambient temperature 25±5°C: ±0.1% or less (Current: ±20μA) Ambient temperature 0 to 55°C: ±0.3% or less (Current: ±60μA)			
Maximum conversion speed		0.5ms (0mA→20mA, 20mA→0mA conversion time)		80μs/channel			
Absolute maximum output		-		-			
No. of analog output points		16 channels/module		8 channels/module			
Isolation method	Between output terminal and power supply of programmable controller	Photocoupler		Photocoupler			
	Between channels	Non-isolation		Non-isolation			
	Between external power supply and analog output	-		Transformer			
No. of occupied points		32 points		16 points			
External interface		38-point terminal block		18-point terminal block			
Current consumption		0.3A		0.16A			
External power supply Power supply	Voltage	15VDC/-15VDC		24VDC +20%, -15%			
	Current	15VDC: 0.53A / -15VDC: 0.125A		0.26A			

• **Note for programming**
(1) Since the assignment of the input/output signals (X, Y) and buffer memory addresses differs between the A616DAV/A616DAI and the R60DAV8//R60DAI8, change the sequence program accordingly.

For High-speed Counter Modules

1-slot type

(1)ERNT-1AR61D Terminal block (38 points) → Connector (40P)

Model	MELSEC-A series module model	No. of channels	MELSEC iQ-R series module model
ERNT-1AR61D	AD61 AD61-S1	2 channels	RD62P2

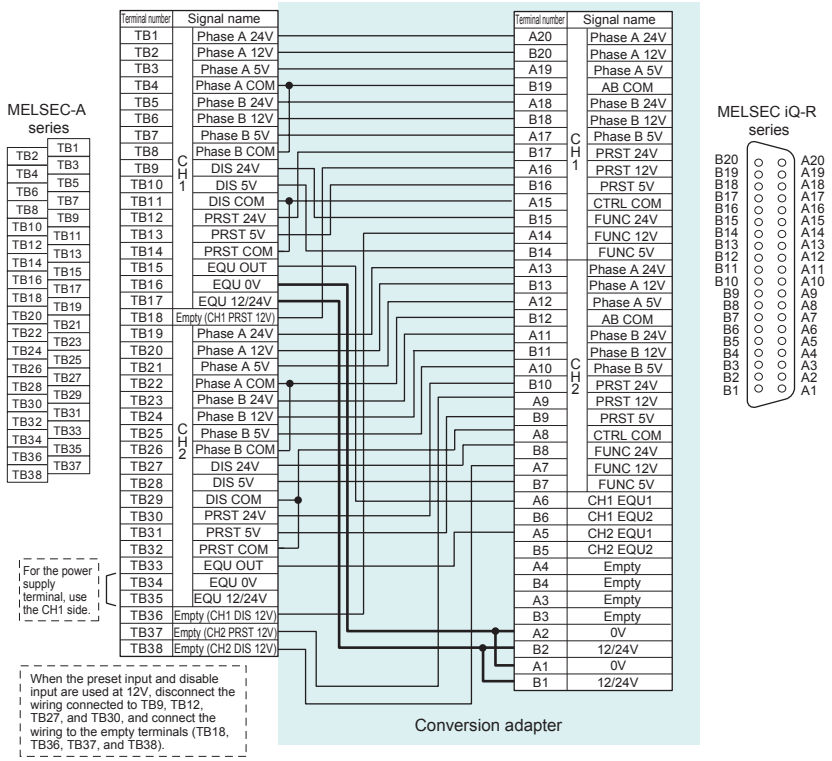

MELSEC-AnS series / MELSEC iQ-R series
Upgrade Tool

[Specification comparison chart]

Item \ Model			MELSEC-A series		MELSEC iQ-R series		
			AD61	AD61-S1	RD62P2		
No. of channels			2 channels	2 channels	2 channels		
Counting speed switch setting			-	-	200kPPS (100k to 200kPPS)	100kPPS (10k to 100kPPS)	10kPPS (10kPPS or less)
Performance specifications per channel	Count input signal	Phases	1-phase input, 2-phase input	1-phase input, 2-phase input	1-phase input (1x/2x), 2-phase input (1x/2x/4x), CW/CCW input		
		Signal level (φA, φB)	5/12/24VDC: 2 to 5mA	5/12/24VDC: 2 to 5mA	5/12/24VDC: 2 to 5mA		
	Counter	Maximum counting speed	1-phase input: 50kPPS 2-phase input: 50kPPS	1-phase input: 10kPPS 2-phase input: 7kPPS	200kPPS	100kPPS	10kPPS
		Counting range	24-bit binary (0 to 16777215)	24-bit binary (0 to 16777215)	32-bit binary (-2147483648 to 2147483647)		
		Type	UP/DOWN preset counter + Ring counter function	UP/DOWN preset counter + Ring counter function	UP/DOWN preset counter + Ring counter function		
		Minimum count pulse width (Duty ratio: 50%)	20 μs (10 μs, 10 μs) (1- or 2-phase input)	100 μs (50 μs, 50 μs) (1-phase input) / 142 μs (71μs, 71μs) (2-phase input)	5μs (2.5μs, 2.5μs) (Minimum phase difference during 2-phase input: 1.25 μs)	10μs (5μs, 5μs) (Minimum phase difference during 2-phase input: 2.5 μs)	100 μs (50 μs, 50 μs) (Minimum phase difference during 2-phase input: 25 μs)
	Size comparison	Comparison range	Binary format (binary) 24 bits	Binary format (binary) 24 bits	32-bit signed binary		
		Comparison result	Setting value < Count value Setting value = Count value Setting value > Count value	Setting value < Count value Setting value = Count value Setting value > Count value	Setting value < Count value Setting value = Count value Setting value > Count value		
	External input	Preset	12/24VDC: 3/6mA 5VDC: 5mA	12/24VDC: 3/6mA 5VDC: 5mA	5/12/24VDC 7 to 10mA		
		Count disable	12/24VDC: 3/6mA 5VDC: 5mA	12/24VDC: 3/6mA 5VDC: 5mA	-		
		Function start	-	-	5/12/24VDC 7 to 10mA		
		Digital filter	-	-	0ms, 0.1ms, 1ms, 10ms		
	External output	Coincidence output	Transistor output (Open collector) 12/24VDC 0.5A	Transistor output (Open collector) 12/24VDC 0.5A	Transistor output (Sink type), 2 points/channel 12/24VDC 0.5A/point 2A/common		
No. of occupied points			32 points	32 points	16 points		
Current consumption			0.30A	0.30A	0.11A		

Note 1. The PRST 24V terminals (terminal numbers TB12 and TB30) on the existing terminal block are connected to the PRST 24V terminals on the RD62P2. When the module is used with the preset input of 12V, it can be used by connecting the wiring of the PRST 24V terminals (terminal numbers TB12 and TB30) with terminal numbers TB18 and TB37. (Refer to the figure below.)
Since the specifications for the external input differ, check the specifications of the external device.

2. The DIS 24V terminals (terminal numbers TB9 and TB27) on the existing terminal block are connected to the FUNC 24V terminals on the RD62P2. When the module is used with the disable input of 12V, it can be used by connecting the wiring of the DIS 24V terminals (terminal numbers TB9 and TB27) with terminal numbers TB36 and TB38. (Refer to the figure below.)
Since the specifications for the external input differ, check the specifications of the external device.

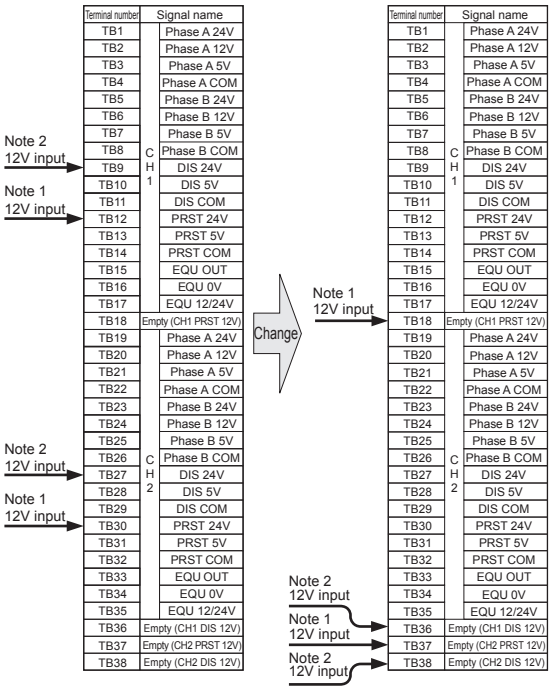

3. For the power supply of the coincidence output on AD61, use only the CH1 side (terminal numbers TB16 and 17).
When an external power supply is used on the CH2 side (terminal numbers TB34 and 35), change the wiring. (Refer to the figure below.)

When the CH1 side (terminal numbers TB16 and 17) and the CH2 side (terminal numbers TB35 and 34) use different external power supplies, change them to the same power supply.

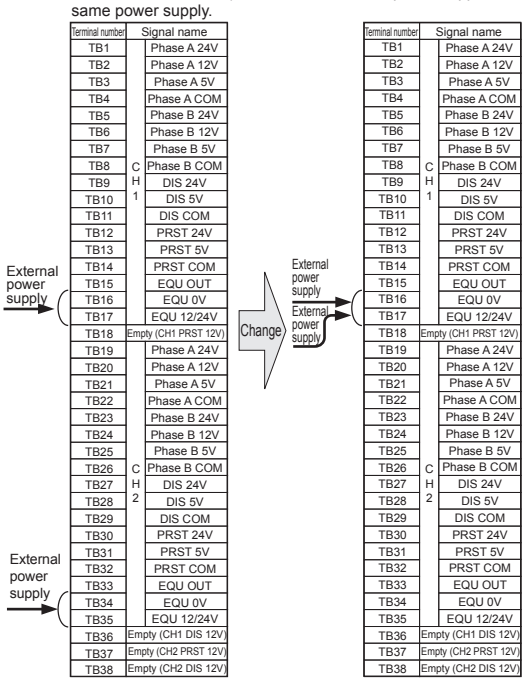

4. The counting speed is affected by the pulse rise time and fall time (t). The countable counting speeds are as shown in the table below. Note that if pulses whose rise or fall time is great are counted, a count error may occur.

Rise/Fall time \ Counting speed switch setting	Shared by 1-phase input and 2-phase input		
	200k	100k	10k
t = 1.25μs or less	200kPPS	100kPPS	10kPPS
t = 2.5μs or less	100kPPS	100kPPS	10kPPS
t = 25μs or less	-	10kPPS	10kPPS
t = 500μs	-	-	500PPS

5. Specifications in the ▭ areas differ between the MELSEC-A series and the MELSEC iQ-R series and are restricted when replacing.
Check that the specifications of devices and equipment to be connected are satisfied.
6. For detailed specifications and general specifications not described in the specification comparison charts, refer to the user's manual for the module used.

• Note for programming
(1) Since the assignment of the input/output signals (X, Y) and buffer memory addresses differs between the AD61/AD61-S1 and the RD62P2, change the sequence program accordingly.

Base Adapter

Specifications

A MELSEC iQ-R series base unit can be mounted by using the mounting holes of the MELSEC-A series base unit. (No need to drill any additional mounting holes.)

Model (*1)	Specifications		Mountable conversion adapter support flange
	MELSEC-A series compatible module	MELSEC iQ-R series compatible module	
ERNT-AQB38N	A38B, A38B-UL, A38HB A38HBEU, A38B-E	R312B	ERNT-1AR12F
		R38B	ERNT-1AR8F
ERNT-AQB35N	A35B, A35B-UL, A35B-E	R38B	ERNT-1AR8F
		R35B	ERNT-1AR5F
ERNT-AQB68N	A68B, A68B-UL	R612B	ERNT-1AR12F
		R68B	ERNT-1AR8F
ERNT-AQB58N	A58B, A58B-UL	R68B (*2)	ERNT-1AR8F
ERNT-AQB65N	A65B, A65B-UL	R68B	ERNT-1AR8F
		R65B	ERNT-1AR5F
ERNT-AQB55N	A55B, A55B-UL	R65B (*2)	ERNT-1AR5F

*1: ERNT-AQB** (products without "N" at the end of their model names) cannot be used.
*2: Since base units without a power supply do not exist in the MELSEC iQ-R series, the model here is the extension base unit after replacement.

Mounting Dimensions

- Compared to the MELSEC-A series, the height is shorter after replacement.
  (For details on the width and depth of the module, refer to Usage Cautions"Usage Cautions" (page 1-27).)
- Since the dimensions of the base adapter mounting holes (four points) are the same as those of the mounting holes on the MELSEC-A series base unit, there is no need to drill any additional mounting holes on the control panel.
- The slot positions of modules differ between the MELSEC-A series and the MELSEC iQ-R series. After replacement, adjust the lengths of the cables.

◎MELSEC iQ-R series

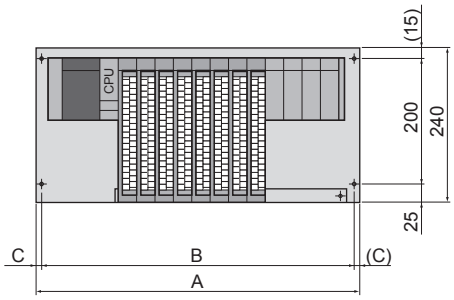

◎ (Reference) MELSEC-A series

Unit: mm

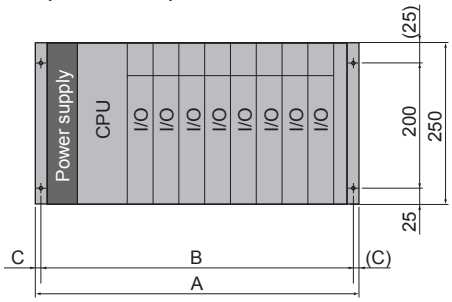

Model	A	B	C	MELSEC-A series base unit model	A	B	C
ERNT-AQB38N	480	460	10	**A38B (-UL/-E), A38HB (EU)**	480	460	10
ERNT-AQB68N	466	446	10	**A68B(-UL)**	466	446	10
ERNT-AQB58N	411	391	10	**A58B(-UL)**	411	391	10
ERNT-AQB35N	382	362	10	**A35B(-UL/-E)**	382	362	10
ERNT-AQB65N	352	332	10	**A65B(-UL)**	352	332	10
ERNT-AQB55N	297	277	10	**A55B(-UL)**	297	277	10

When Not Using a Base Adapter

When not using a base adapter, screw holes (M4 screw x 3 points) need to be provided to mount a conversion adapter support flange as shown below.
The conversion adapter support flange must be mounted.

When using a main base unit

◎ **With R312B, R38B, and R35B**

Unit: mm

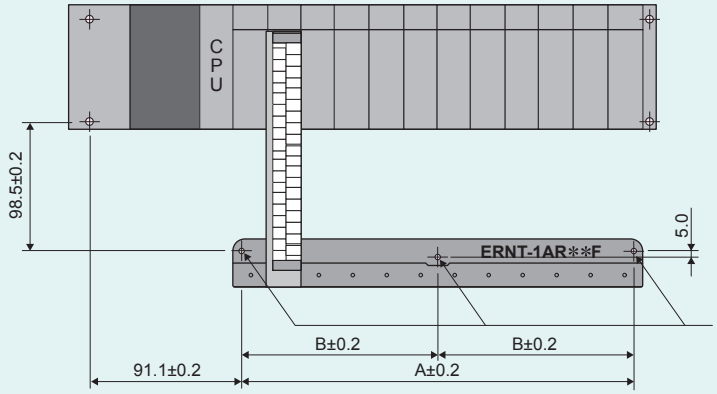

Conversion adapter support flange	A	B
ERNT-1AR12F	325.6	162.8
ERNT-1AR8F	212.8	106.4
ERNT-1AR5F	128.2	64.1

Drill screw holes (M4 screw, 3 locations) at these positions, and mount the conversion adapter support flange.

When using an extension base unit

◎ **With R612B, R68B, and R65B**

Unit: mm

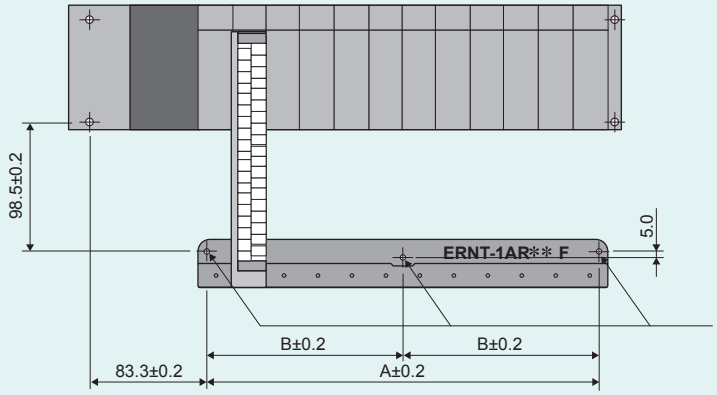

Conversion adapter support flange	A	B
ERNT-1AR12F	325.6	162.8
ERNT-1AR8F	212.8	106.4
ERNT-1AR5F	128.2	64.1

Drill screw holes (M4 screw, 3 locations) at these positions, and mount the conversion adapter support flange.

Conversion adapter support flange

Specifications

The conversion adapter support flange is used to secure the bottom of the conversion adapter. One flange is required for each base unit.

Model	Specifications
ERNT-1AR12F	Conversion adapter support flange for 12-slot MELSEC iQ-R series modules
ERNT-1AR8F	Conversion adapter support flange for 8-slot MELSEC iQ-R series modules
ERNT-1AR5F	Conversion adapter support flange for 5-slot MELSEC iQ-R series modules

Usage Cautions

A conversion adapter is a product that converts the pin assignments of a MELSEC-A series module into the pin assignments of a MELSEC iQ-R series module.
To check differences in performance, functionality, I/O signals for CPU, buffer memory addresses, and other items when replacing the MELSEC-A series with the MELSEC iQ-R series, be sure to refer to the manual for each MELSEC iQ-R series module before using the product.

Module Width

(1) Since the width of MELSEC iQ-R series modules is smaller (MELSEC-A series: 37.5mm → MELSEC iQ-R series: 27.8mm), the wiring area becomes smaller as well. Check the wiring area when mounting a conversion adapter.

(2) If the wiring causes interference with adjacent modules, take an action such as lifting the wiring forward to prevent interference.

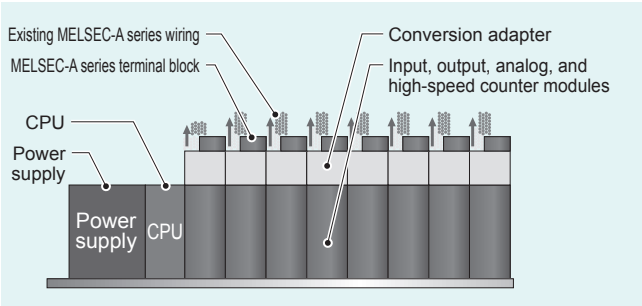

(3) If interference still occurs, keep the next slot open to secure a space for wiring.

Example) With R312B

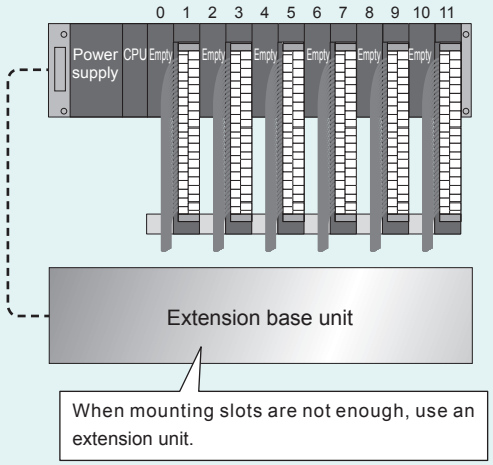

Attach a connector cover (accessory) or blank cover module (RG60) to a connector where no module is mounted to prevent entry of foreign matter such as dust.

Depth

Since the depth becomes larger, check that it can be mounted.

MELSEC-A : MELSEC-A series MELSEC iQ-R : MELSEC iQ-R series

Model	ERNT-1AR10XY ERNT-1AR40Y ERNT-1AR68AD ERNT-1AR68AN ERNT-AQT62DA	ERNT-1AR41X ERNT-1AR41Y ERNT-1AR61D ERNT-AQT68DA ERNT-1AR11X13Y ERNT-1AR10AY ERNT-1AR51Y ERNT-1AR616AD ERNT-1AR616DA
Depth	184.7mm	194.7mm
Mounting diagram	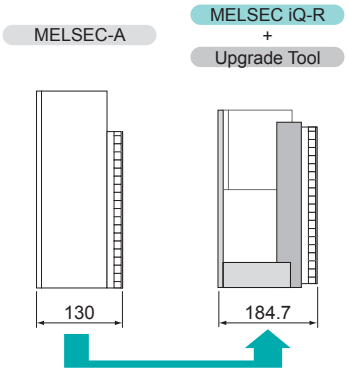 54.7 mm increase	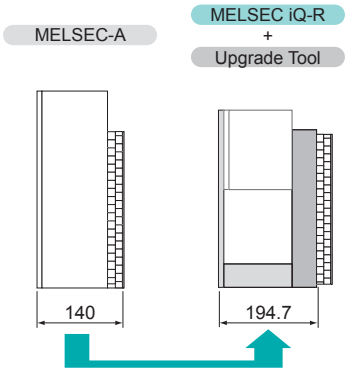 54.7 mm increase

Model	ERNT-ASLCXY81
Depth	203.9mm
Mounting diagram	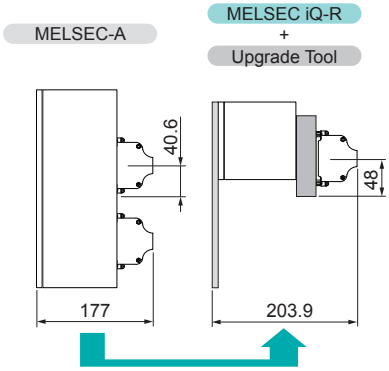 26.9 mm increase

*: Each depth is measured from the panel surface.
- MELSEC-A series: Base unit + Input/output/analog/high-speed counter modules + Terminal block
- MELSEC iQ-R series + Upgrade tool: Base adapter + Base unit + Input/output/analog/high-speed counter modules + Conversion adapter + Terminal block

Conversion Adapter Support Flange / Base Adapter

When using a conversion adapter, the conversion adapter support flange is required.
We recommend using a base adapter that permits the MELSEC iQ-R series to be mounted using the mounting holes of the MELSEC-A series. (No need to drill any additional mounting holes.)

External Dimensions

Conversion Adapter

ERNT-1AR10XY
ERNT-1AR40Y
ERNT-1AR68AD
ERNT-1AR68AN
ERNT-AQT62DA
ERNT-AQT68DA

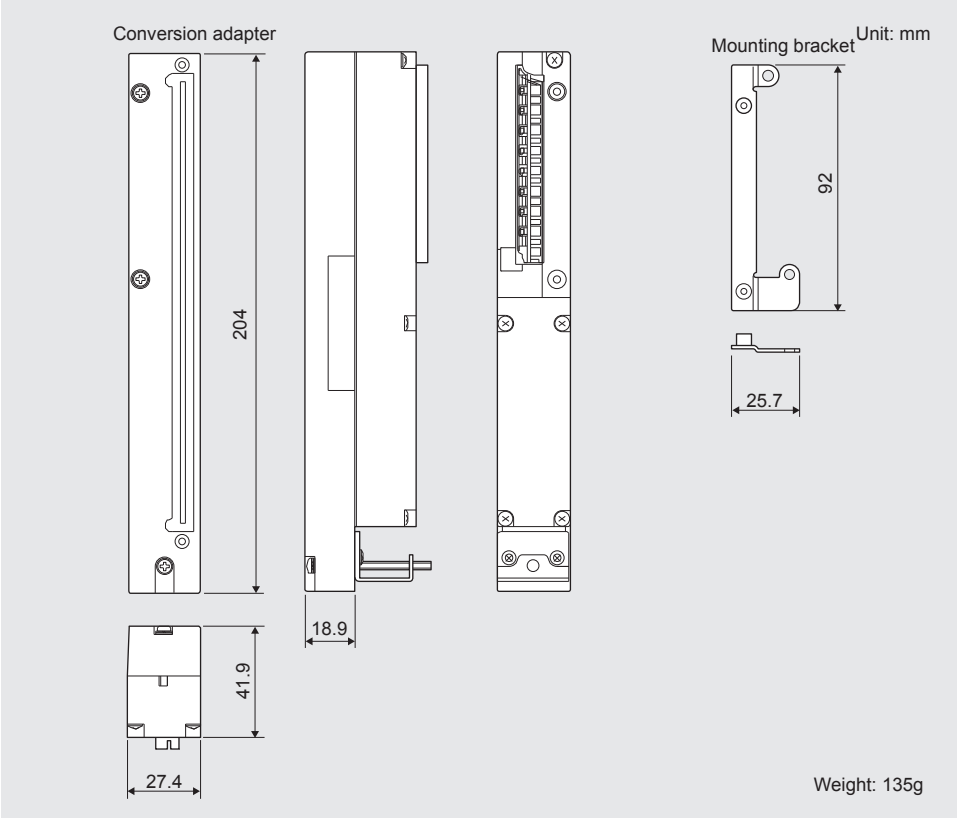

ERNT-1AR41X
ERNT-1AR41Y
ERNT-1AR61D

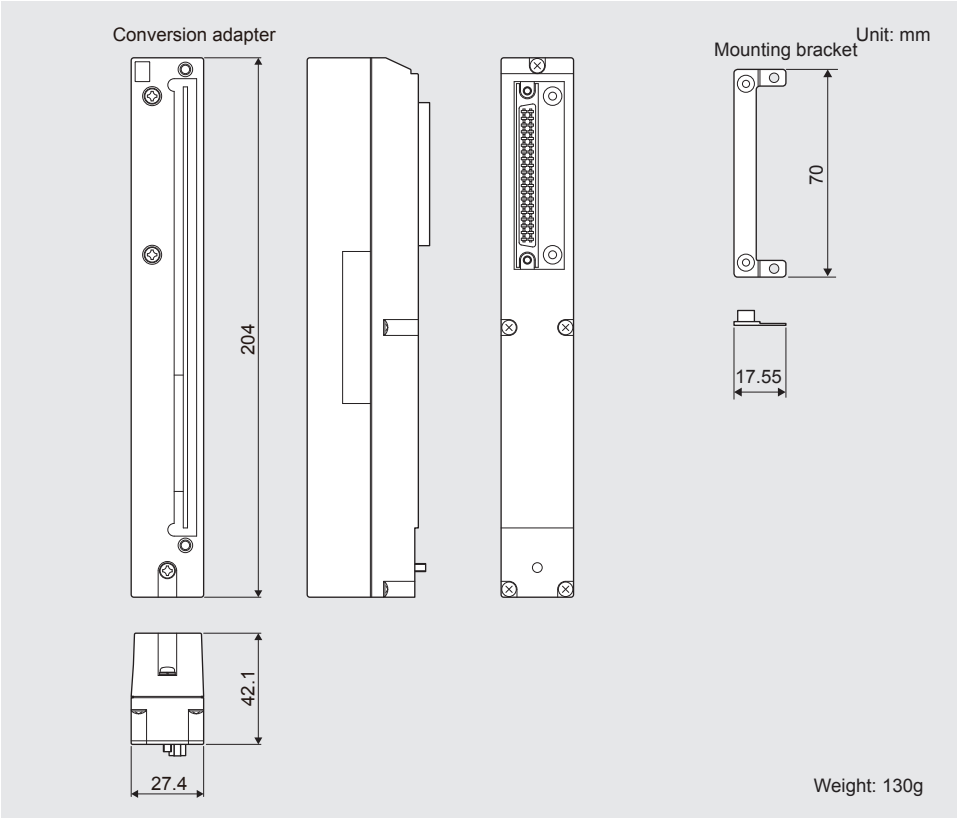

ERNT-1AR11X13Y
ERNT-1AR10AY
ERNT-1AR51Y
ERNT-1AR616AD
ERNT-1AR616DA

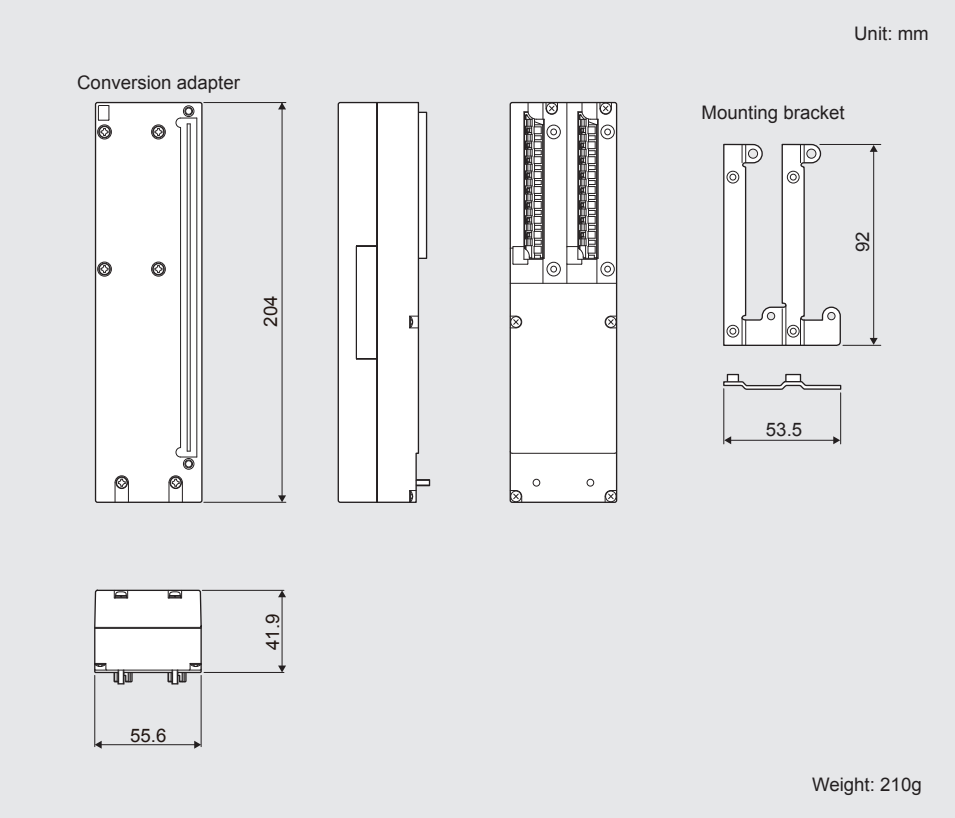

ERNT-ASLCXY81

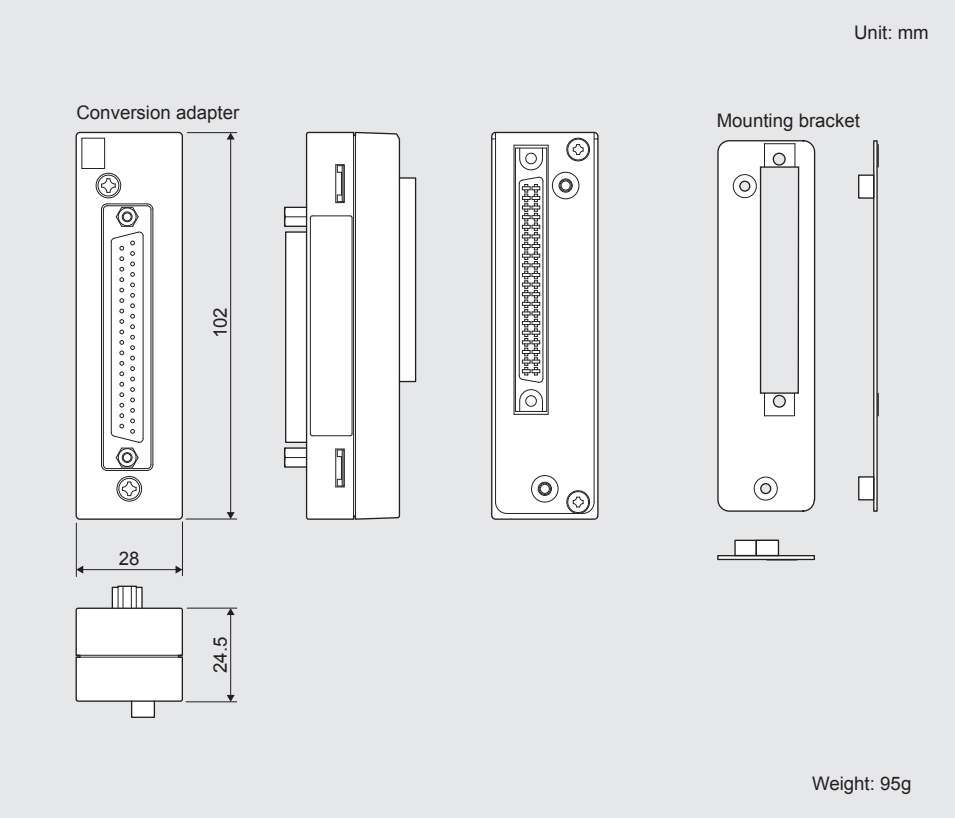

Base Adapter

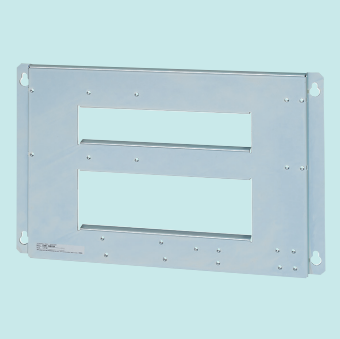

ERNT-AQB38N
ERNT-AQB68N
ERNT-AQB58N
ERNT-AQB35N
ERNT-AQB65N
ERNT-AQB55N

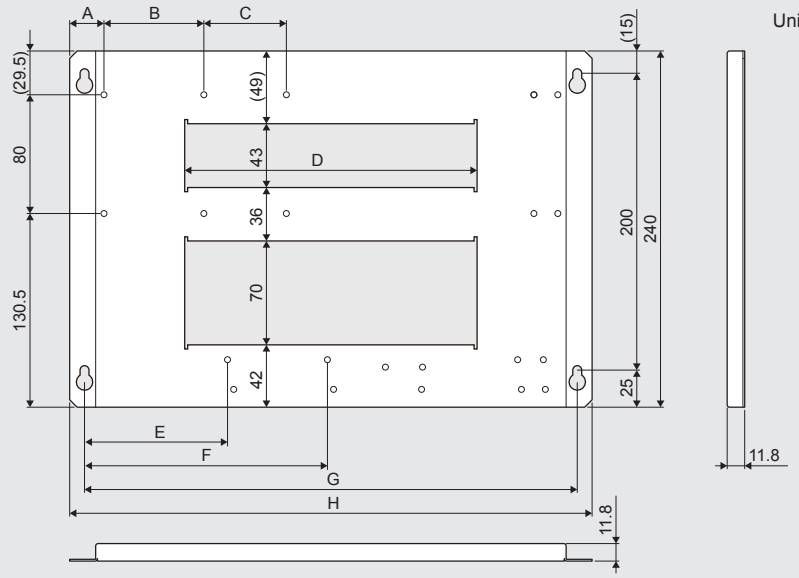

Model	A	B	C	D	E	F	G	H	Weight (g)
ERNT-AQB38N	34.5	77.8	-	401	125.55	203.35	460	480	970
ERNT-AQB68N	24.5	81.2	-	401	107.75	188.95	446	466	930
ERNT-AQB58N	50.7	-	-	296	133.95	-	391	411	870
ERNT-AQB35N	47.7	65.3	-	296	138.75	204.05	362	382	795
ERNT-AQB65N	23.1	67.3	55.6	197	106.35	173.65	332	352	790
ERNT-AQB55N	35.4	55.6	-	197	118.65	-	277	297	655

Conversion Adapter Support Flange

ERNT-1AR12F
ERNT-1AR8F
ERNT-1AR5F

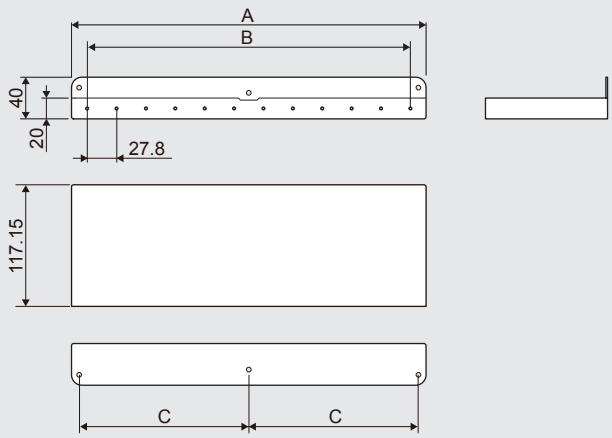

Model	A	B	C	Weight (g)
ERNT-1AR12F	340.2	310.2	162.8	780
ERNT-1AR8F	227.4	197.4	106.4	545
ERNT-1AR5F	142.8	112.8	64.1	365

Memo

AnS iQ-R series MELSEC-AnS series / MELSEC iQ-R series Upgrade Tool

Upgrading the MELSEC-AnS series to the MELSEC iQ-R series

- **Simplifies replacement with the MELSEC iQ-R series**
  The upgrade tool makes it easy to replace the Mitsubishi Electric programmable controller MELSEC-AnS series with the MELSEC iQ-R series.
- **Significantly shortens the time required for input, output, analog, and high-speed counter module wiring, and significantly reduces wiring errors**
  - The upgrade tool allows you to connect the wiring connected to the MELSEC-AnS series input/output/analog/high-speed counter modules as is to the MELSEC iQ-R series using a conversion adapter. (Some power supply and common terminal connections need to be changed.)
  - With a base adapter, the MELSEC iQ-R series can be mounted by using the mounting holes of the MELSEC-AnS series base unit. (No need to drill any additional mounting holes.) Upgrading is possible also when a DIN rail is attached.
- **Permits reuse of sequence programs**
  The upgrade tool allows you to convert a MELSEC-AnS series program into a MELSEC iQ-R series program using the Mitsubishi Electric programming tools. For details, contact Mitsubishi Electric Corporation.

Product Overview

This upgrade tool comprises a "conversion adapter" that is used to transfer the existing wiring of the Mitsubishi Electric programmable controller MELSEC-AnS series module to wiring for a MELSEC iQ-R series module and a "base adapter" that the MELSEC iQ-R series can be mounted by using the mounting holes of the MELSEC-A series base unit. (When a DIN rail is mounted, the "base adapter" is not required.)

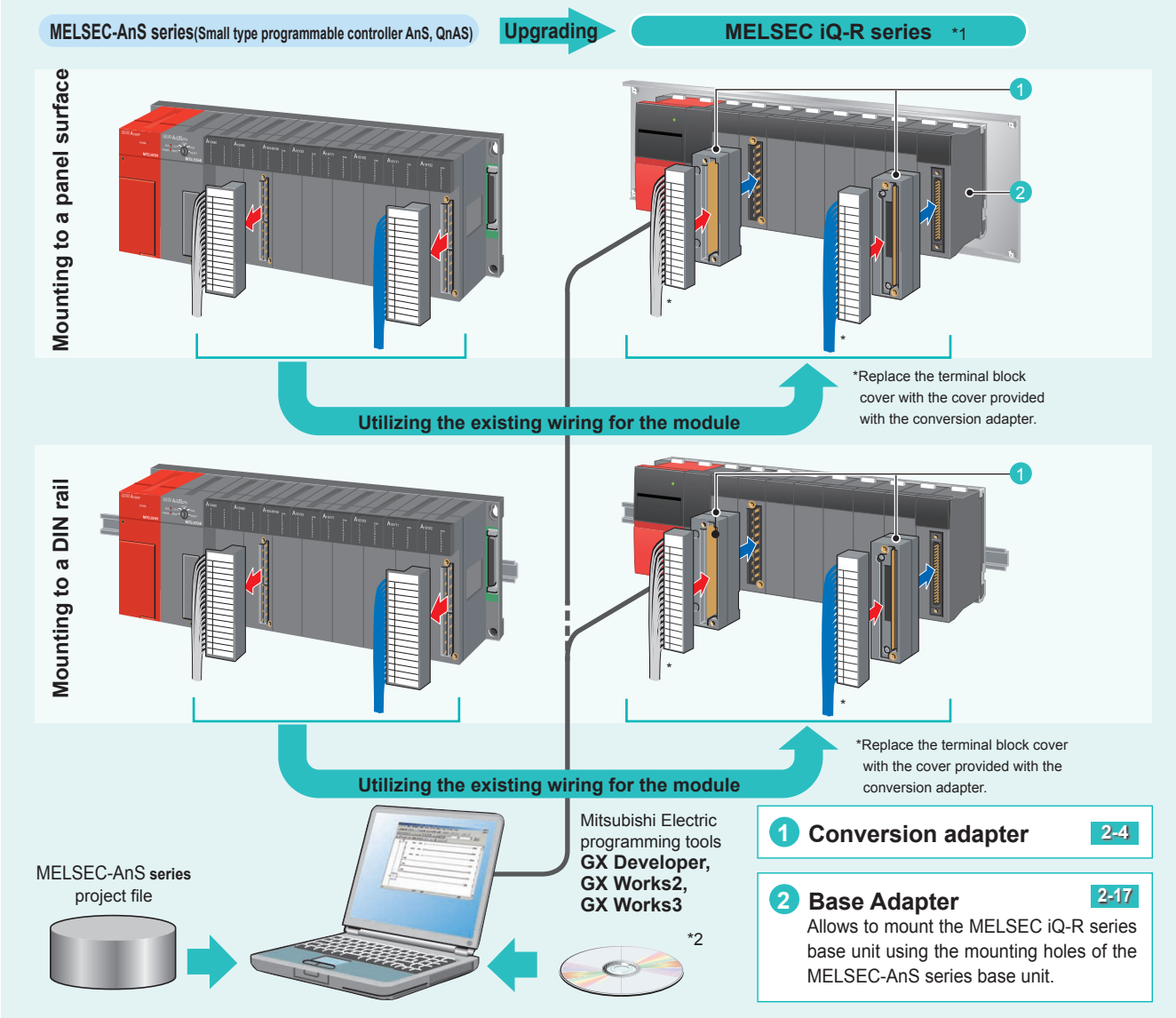

* 1: When replacing the MELSEC-AnS series with the MELSEC iQ-R series, check that it can be mounted, because the width and depth of the modules differ.

* 2: Example of how to change the program
1) On GX Developer, convert the PLC type for the target program to the MELSEC-Q series and save (GPJ file).
2) On GX Works2, open the saved project by selecting “Open other data” → “Open Other Project” from “Project” and save it (GXW file).
3) On GX Works3, open the saved project by selecting “Open Other Format File” → “GX Works2 Format” → “Open Project” from “Project”.

Model List

1 Conversion Adapter

When selecting a conversion adapter, be sure to refer to the specification comparison charts and notes on pages 2-4 to 2-16.
These pages describe precautions such as differences in the number of points per common. For detailed specifications and general specifications not described in the specification comparison charts, refer to the user's manual for the module used. Note that the areas where the specifications differ between the MELSEC-AnS series and the MELSEC iQ-R series are restricted in terms of specifications when replacing. Check the specifications of the connected devices.

For Input/Output Modules

<1-slot type>

Input / Output	MELSEC-AnS series module model before replacement	MELSEC iQ-R series module model after replacement	Note	Conversion adapter				Page
				Model	Shape (No. of points/No. of pins)		No. of input/ output points	
					MELSEC-AnS series	MELSEC iQ-R series		
Input	A1SX10	RX10	*4	**ERNT-ASQTXY10**	Terminal block (20 points)	Terminal block (18 points)	16 points	**2-4**
	A1SX10EU							
Output	A1SY10	RY10R2	*1, 4					
	A1SY10EU							
Input	A1SX30	RX40C7	*2, 4	**ERNT-ASQTX40**				**2-5**
	A1SX40		*3, 4					
	A1SX40-S1		*3					
	A1SX40-S2							
	A1SX80		*3, 4					
	A1SX80-S1		*3					
	A1SX80-S2							
	A1SI61		*3, 4, 6					
Output	A1SY22	RY20S6	*1, 4	**ERNT-ASQTY22**				**2-6**
	A1SY40	RY40NT5P	*1, 4	**ERNT-ASQTY40**				**2-6**
	A1SY40P							
	A1SY50	RY40NT5P	*1, 4	**ERNT-ASQTY50**				**2-7**
	A1SY80	RY40PT5P	*1, 4	**ERNT-ASQTY80**				**2-7**
Input	A1SX81	RX41C4, RX41C6HS	*3, 5	**ERNT-ASLCXY81**	D-Sub connector (37P)	Connector (40P)	32 points	**2-8**
	A1SX81-S2		*5					
Output	A1SY81	RY41PT1P						
	A1SY81EP							

* 1: Since the number of points per common differs, check the common terminal connection of the module before replacement.
* 2: When a rated input voltage of 12VAC, 24VAC, or 12VDC is used, change the voltage to 24VDC.
* 3: When a rated input voltage of 12VDC is used, change the voltage to 24VDC.
* 4: A conversion adapter for replacing the MELSEC-AnS series with the MELSEC-Q series
* 5: A conversion adapter for replacing the MELSEC-AnS series with the MELSEC-L series
* 6: Set “Interrupt Settings” of “Module Parameter” in the sequence program.

For Analog Modules

<1-slot type>

Input / Output	MELSEC-AnS series module model before replacement	MELSEC iQ-R series module model before replacement	Note	Conversion adapter				Page
				Model	Shape (No. of points/No. of pins)		No. of channels	
					MELSEC-AnS series	MELSEC iQ-R series		
Input	A1S64AD	R60AD4	*8	**ERNT-ASQT64AD**	Terminal block (20 points)	Terminal block (18 points)	4 channels	**2-9**
	A1S68AD (Voltage input)	R60ADV8	*7, 9	**ERNT-ASQT68AD**			8 channels	**2-10**
	A1S68AD (Current input)	R60ADI8						
Output	A1S62DA	R60DA4	*8, 9	**ERNT-ASQT62DA**			2 channels	**2-11**
	A1S68DAV	R60DAV8	*9	**ERNT-ASQT68DA**			8 channels	**2-12**
	A1S68DAI	R60DAI8						

* 7: For the R60ADV8 and the R60ADI8, voltage input and current input cannot be used together in a single module.
* 8: CH3 and CH4 on the R60DA4 cannot be used. (They are not connected inside the conversion adapter.)
* 9: A conversion adapter for replacing the MELSEC-AnS series with the MELSEC-Q series

For High-speed Counter Modules

<1-slot type>

Input / Output	MELSEC-AnS series module model before replacement	MELSEC iQ-R series module model before replacement	Note	Conversion adapter				Page
				Model	Shape (No. of points/No. of pins)		No. of channels	
					MELSEC-AnS series	MELSEC iQ-R series		
Input	A1SD61	RD62P2	*10, 11	**ERNT-ASLTD61**	Terminal block (20 points)	Connector (40P)	1 channel	**2-13**
	A1SD62	RD62P2	*11	**ERNT-ASLTD62**			2 channels	**2-15**
	A1SD62E	RD62P2E						

* 10: The RD62P2 does not have the limit switch output function of the A1SD61. Use the coincidence output function of the RD62P2 instead. Note that the specifications differ, such as a fewer number of settings.
* 11: A conversion adapter for replacing the MELSEC-AnS series with the MELSEC-L series

2 Base Adapter

A MELSEC iQ-R series base unit can be mounted by using the mounting holes of the MELSEC-AnS series base unit.

Type	MELSEC-AnS series base unit model before replacement	MELSEC iQ-R series base unit model after replacement	Note	Model	Remarks	Page
Main	A1S38B	R38B	*1	**ERNT-ASQB38N**	To use the Q7BAT-SET, keep the CPU module (before mounting the Q7BAT-SET) mounted to its base adapter when mounting the Q7BAT-SET to the CPU module.	**2-17**
	A1S38HB					
	A1S38HBEU					
	A1S35B	R35B	*1	**ERNT-ASQB35N**		
	A1S33B	N/A	-	**-**		
	A1S32B	N/A	-	**-**		
	A1SJCPU	R35B	*1	**ERNT-ASQB00JN**		
	A1SJCPU-S3					
	A1SJHCPU					
Extension	A1S68B	R68B	*1	**ERNT-ASQB68N**		
	A1S65B	R65B	*1	**ERNT-ASQB65N**		
	A1S58B	R68B	*1, 2	**ERNT-ASQB58N**		
	A1S55B	N/A	-	**-**		
	A1S52B	N/A	-	**-**		

* 1 : A base adapter for replacing the MELSEC-AnS series with the MELSEC-Q series
* 2 : Since the base units in the MELSEC iQ-R series are always provided with a power supply, the extension base units with a power supply are the replacement target.

Conversion Adapter

Specifications

For Input/Output Modules

1-slot type

(1)ERNT-ASQTXY10 Terminal block (20 points) → Terminal block (18 points)

Model	MELSEC-AnS series module model	No. of input/ output points	MELSEC iQ-R series module model
ERNT-ASQTXY10	A1SX10	16 points	RX10
	A1SX10EU		
	A1SY10		RY10R2
	A1SY10EU		

Note 1. A conversion adapter for replacing the MELSEC-AnS series with the MELSEC-Q series

A1SX10/A1SX10EU → RX10

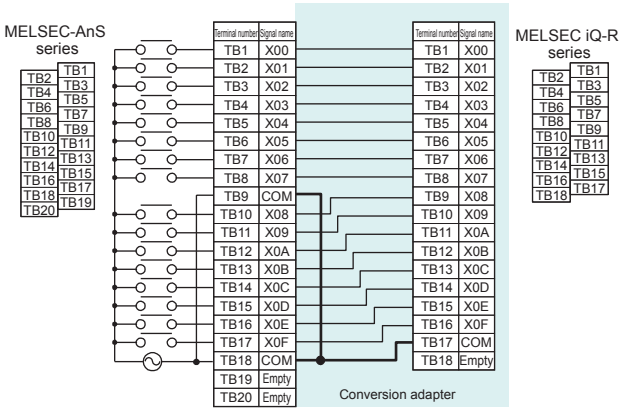

[Specification comparison chart]

Specifications \ Model		MELSEC-AnS series		MELSEC iQ-R series
		A1SX10	A1SX10EU	RX10
No. of input points		16 points	16 points	16 points
Rated input voltage		100-120VAC 50/60Hz	100-120VAC 50/60Hz	100-120VAC 50/60Hz
Rated input current		Approx. 6mA (100VAC, 60Hz)	Approx. 7mA (120VAC, 60Hz)	8.2mA (100VAC, 60Hz) 6.8mA (100VAC, 50Hz)
Inrush current		Max. 200mA, 1ms or less (132VAC)	Max. 200mA, 1ms or less (132VAC)	Max. 200mA, 1ms or less
ON voltage / ON current		80VAC or more/ 5mA or more	80VAC or more/ 5mA or more	80VAC or more / 5mA or more (50Hz, 60Hz)
OFF voltage / OFF current		30VAC or less/ 1.4mA or less	30VAC or less/ 1.4mA or less	30VAC or less/ 1.7mA or less (50Hz, 60Hz)
Input impedance		Approx. 18kΩ (60Hz) Approx. 21kΩ (50Hz)	Approx. 18kΩ (60Hz) Approx. 21kΩ (50Hz)	12.2kΩ (60Hz) 14.6kΩ (50Hz)
Response time	OFF→ON	20ms or less	20ms or less	15ms or less (100VAC 50Hz, 60Hz)
	ON→OFF	35ms or less	35ms or less	20ms or less (100VAC 50Hz, 60Hz)
Internal power consumption		50mA (TYP. all points ON)	50mA (TYP. all points ON)	110mA (TYP. all points ON)
Wiring method for common		16 points/common	16 points/common	16 points/common
External interface		20-point terminal block	20-point terminal block	18-point terminal block

Note 2. Specifications in the ▭ areas differ between the MELSEC-AnS series and the MELSEC iQ-R series and are restricted when replacing.
Check that the specifications of devices and equipment to be connected are satisfied.
3. For detailed specifications and general specifications not described in the specification comparison charts, refer to the user's manual for the module used.

A1SY10/A1SY10EU → RY10R2

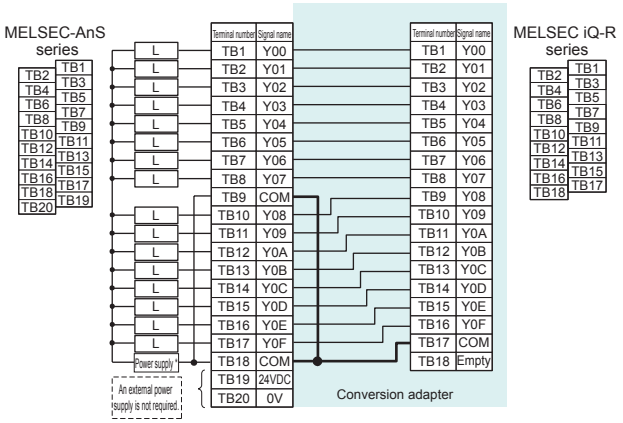

*Power supply

24VDC or 240VAC

[Specification comparison chart]

Specifications \ Model		MELSEC-AnS series		MELSEC iQ-R series
		A1SY10	A1SY10EU	RY10R2
No. of output points		16 points	16 points	16 points
Rated switching voltage/current		24VDC/2A (Resistive load) 240VAC/2A (COSφ = 1) 8A/common	24VDC/2A (Resistive load) 120VAC/2A (COSφ = 1) 8A/common	24VDC 2A/point (Resistive load) 240VAC 2A/point (COSφ = 1) 8A/common
Minimum switching load		5VDC 1mA	5VDC 1mA	5VDC 1mA
Maximum switching voltage		264VAC 125VDC	132VAC 125VDC	264VAC 125VDC
Response time	OFF→ON	10ms or less	10ms or less	10ms or less
	ON→OFF	12ms or less	12ms or less	12ms or less
Surge suppressor		None	None	None
Fuse		None	None	None
Internal current consumption		120mA (TYP. all points ON)	120mA (TYP. all points ON)	450mA (TYP. all points ON)
Wiring method for common		8 points/common	8 points/common	16 points/common
External interface		20-point terminal block	20-point terminal block	18-point terminal block

Note 4. Since the number of points per common changes from 8 (two circuits) to 16, when terminal numbers TB9 and TB18 on the existing module are used separately from each other, change the wiring.
5. The external power supply connected to terminal numbers TB19 and TB20 on the existing terminal block is no longer required.
However, since the wiring is not connected inside the conversion adapter, leaving the external power supply connected is not a problem.
6. Specifications in the ▭ areas differ between the MELSEC-AnS series and the MELSEC iQ-R series and are restricted when replacing.
Check that the specifications of devices and equipment to be connected are satisfied.
7. For detailed specifications and general specifications not described in the specification comparison charts, refer to the user's manual for the module used.

(2)ERNT-ASQTX40 Terminal block (20 points) → Terminal block (18 points)

Model	MELSEC-AnS series module model	No. of input points	MELSEC iQ-R series module model
ERNT-ASQTX40	A1SX30	16 points	RX40C7
	A1SX40		
	A1SX40-S1		
	A1SX40-S2		
	A1SX80		
	A1SX80-S1		
	A1SX80-S2		
	A1SI61		

Note 1. A conversion adapter for replacing the MELSEC-AnS series with the MELSEC-Q series

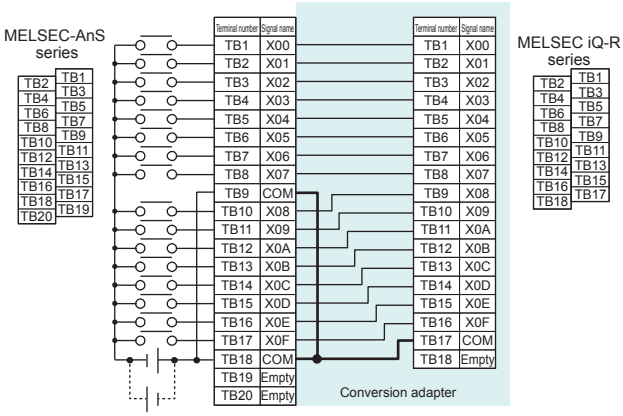

[Specification comparison chart]

Specifications \ Model	MELSEC-AnS series								MELSEC iQ-R series
	A1SX30 (DC/AC input type)	A1SX40 (Sink type)	A1SX40-S1 (Sink type)	A1SX40-S2 (Sink type)	A1SX80 (Sink/Source type)	A1SX80-S1 (Sink/Source type)	A1SX80-S2 (Sink/Source type)	A1SI61	RX40C7 (Positive common/ negative common shared type)
No. of input points	16 points	16 points	16 points	16 points	16 points	16 points	16 points	16 points	16 points
Rated input voltage	12/24VDC 12/24VAC 50/60Hz	12/24VDC	24VDC	24VDC	12/24VDC	24VDC	24VDC	12/24VDC	24VDC
Rated input current	4mA (12VDC/VAC) 8.5mA (24VDC/VAC)	Approx. 3mA/ Approx. 7mA	Approx. 7mA	Approx. 7mA	Approx. 3mA/ Approx. 7mA	Approx. 7mA	Approx. 7mA	Approx. 4mA (12VDC) Approx. 8mA (24VDC)	7.0mA (TYP.)
ON voltage/ ON current	7VDC/VAC or more/ 2mA or more	8VDC or more / 2mA or more	14VDC or more / 4mA or more	14VDC or more / 3.5mA or more	8VDC or more / 2mA or more	17VDC or more / 5mA or more	13VDC or more / 3.5mA or more	9V or more/ 3mA or more	15VDC or more / 4mA or more
OFF voltage/ OFF current	2.7VDC/VAC or less/ 0.7mA or less	4VDC or less / 1mA or less	6.5VDC or less / 1.7mA or less	6.5VDC or less / 1.7mA or less	4VDC or less / 1mA or less	5VDC or less / 1.7mA or less	6VDC or less / 1.7mA or less	4V or less/ 1mA or less	8VDC or less / 2mA or less
Input resistance	Approx. 2.7kΩ	Approx. 3.3kΩ	Approx. 3.3kΩ	Approx. 3.3kΩ	Approx. 3.3kΩ	Approx. 3.3kΩ	Approx. 3.3kΩ	Approx. 2.7kΩ	3.3kΩ
Response time OFF→ON	20ms or less (12/24VDC) 25ms or less (12/24VAC 60Hz)	10ms or less	0.1ms or less	10ms or less	10ms or less	0.4ms or less	10ms or less	0.2ms or less	0.1/0.2/0.4/0.6/1/ 5/10/20/70ms or less
Response time ON→OFF	20ms or less (12/24VDC) 20ms or less (12/24VAC 60Hz)	10ms or less	0.2ms or less	10ms or less	10ms or less	0.5ms or less	10ms or less	0.2ms or less	0.1/0.2/0.4/0.6/1/ 5/10/20/70ms or less
Internal power consumption	50mA (TYP. all points ON)	50mA (TYP. all points ON)	50mA (TYP. all points ON)	50mA (TYP. all points ON)	50mA (TYP. all points ON)	50mA (TYP. all points ON)	50mA (TYP. all points ON)	57mA (TYP. all points ON)	110mA (TYP. all points ON)
Wiring method for common	16 points/common	16 points/ common	16 points/ common	16 points/ common	16 points/ common	16 points/ common	16 points/ common	16 points/ common	16 points/common
External interface	20-point terminal block	20-point terminal block	20-point terminal block	20-point terminal block	20-point terminal block	20-point terminal block	20-point terminal block	20-point terminal block	18-point terminal block

Note 2. When replacing the A1SX30 with the RX40C7 and a rated input voltage of 12VAC, 24VAC, or 12VDC is used, change the voltage to 24VDC.
3. When replacing the A1SX40, the A1SX80, or the A1SI61 with the RX40C7 and a rated input voltage of 12VDC is used, change the voltage to 24VDC.
4. Specifications in the ▭ areas differ between the MELSEC-AnS series and the MELSEC iQ-R series and are restricted when replacing. Check that the specifications of devices and equipment to be connected are satisfied.
5. For detailed specifications and general specifications not described in the specification comparison charts, refer to the user's manual for the module used.

(3)ERNT-ASQTY22 Terminal block (20 points) → Terminal block (18 points)

Model	MELSEC-AnS series module model	No. of output points	MELSEC iQ-R series module model
ERNT-ASQTY22	A1SY22	16 points	RY20S6

Note 1. A conversion adapter for replacing the MELSEC-AnS series with the MELSEC-Q series

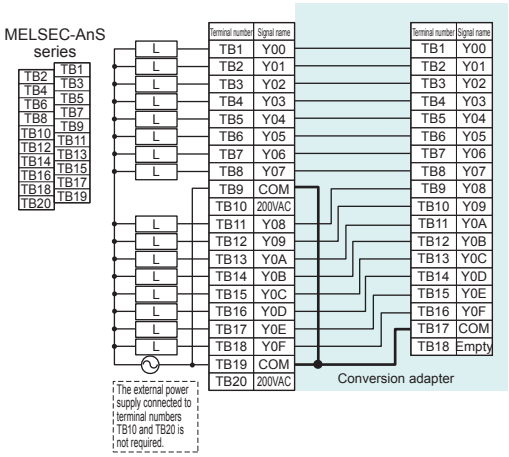

[Specification comparison chart]

Specifications \ Model		MELSEC-AnS series	MELSEC iQ-R series
		A1SY22	RY20S6
No. of output points		16 points	16 points
Rated load voltage		100-240VAC 50/60Hz ±3Hz	100-240VAC 50/60Hz ±5Hz
Maximum load current		0.6A/point, 2.4A/common	0.6A/point, 4.8A/common
Minimum load voltage/current		24VAC 100mA 100VAC 10mA 240VAC 20mA	24VAC 100mA 100VAC 25mA 240VAC 25mA
Maximum inrush current		20A 10ms or less, 8A 100ms or less	20A one cycle or less
Leakage current at OFF		1.5mA (120VAC 60Hz) 3mA (240VAC 60Hz)	1.5mA or less (for 120V, 60Hz) 3mA or less (for 240V, 60Hz)
Maximum voltage drop at ON		1.5VAC or less (0.1 to 0.6A) 1.8VAC or less (50 to 100mA) 2VAC or less (10 to 50mA)	1.5VAC or less (for a load current of 0.6A)
Response time	OFF→ON	1ms or less	1ms + 0.5 cycle or less
	ON→OFF	1ms + 0.5 cycle or less	1ms + 0.5 cycle or less (Rated load, resistive load)
Surge suppressor		CR absorber	CR absorber
Fuse		5A (1 common/set) Not replaceable	None (Installing a fuse per external wiring point is recommended.)
Internal current consumption		270mA (TYP. all points ON)	280mA (MAX. all points ON)
Wiring method for common		8 points/common	16 points/common
External interface		20-point terminal block	18-point terminal block

Note 2. Since the number of points per common changes from 8 (two circuits) to 16, when terminal numbers TB9 and TB19 on the existing module are used separately from each other, change the wiring.
3. The external power supply connected to terminal numbers TB10 and TB20 on the existing terminal block is no longer required.
4. Specifications in the ▭ areas differ between the MELSEC-AnS series and the MELSEC iQ-R series and are restricted when replacing.
Check that the specifications of devices and equipment to be connected are satisfied.
5. For detailed specifications and general specifications not described in the specification comparison charts, refer to the user's manual for the module used.

(4)ERNT-ASQTY40 Terminal block (20 points) → Terminal block (18 points)

Model	MELSEC-AnS series module model	No. of output points	MELSEC iQ-R series module model
ERNT-ASQTY40	A1SY40 A1SY40P	16 points	RY40NT5P

Note 1. A conversion adapter for replacing the MELSEC-AnS series with the MELSEC-Q series

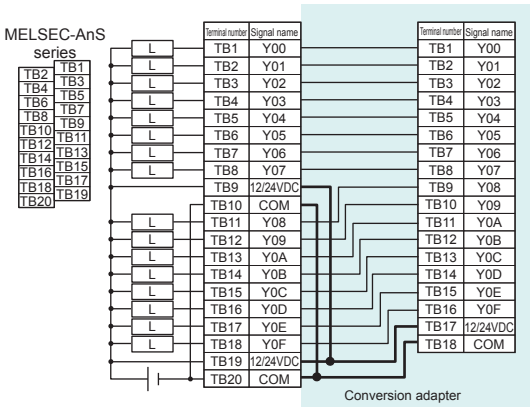

[Specification comparison chart]

Specifications \ Model		MELSEC-AnS series		MELSEC iQ-R series
		A1SY40 (Sink type)	A1SY40P (Sink type)	RY40NT5P (Sink type)
No. of output points		16 points	16 points	16 points
Rated load voltage		12/24VDC	12/24VDC	12/24VDC
Maximum load current		0.1A/point 0.8A/common	0.1A/point 0.8A/common	0.5A/point 5A/common
Maximum inrush current		0.4A 10ms or less	0.7A 10ms or less	1.5 to 3.5A/point (Current is restricted by overload protection function.)
Leakage current at OFF		0.1mA or less	0.1mA or less	0.1mA or less
Maximum voltage drop at ON		1.0VDC (TYP.) 0.1A 2.5VDC (MAX.) 0.1A	0.1VDC (TYP.) 0.1A 0.2VDC (MAX.) 0.1A	0.2VDC (TYP.) 0.5A 0.3VDC (MAX.) 0.5A
Response time	OFF→ON	2ms or less	1ms or less	0.5ms or less
	ON→OFF	2ms or less (Resistive load)	1ms or less (Rated load, resistive load)	1ms or less (Rated load, resistive load)
Surge suppressor		Zener diode	Zener diode	Zener diode
Fuse		1.6A (1 common/set) Not replaceable	None	None
Protection function		None	Yes (Overheat protection, short-circuit protection)	Yes (Overheat protection, overload protection)
Internal current consumption		270mA (TYP. all points ON)	79mA (TYP. all points ON)	140mA (TYP. all points ON)
Wiring method for common		8 points/common	8 points/common	16 points/common
External interface		20-point terminal block	20-point terminal block	18-point terminal block

Note 2. Since the number of points per common changes from 8 (two circuits) to 16, when terminal numbers TB9 and TB19 as well as terminal numbers TB10 and TB20 on the MELSEC-AnS series side are used separately from each other, change the wiring.
3. Specifications in the ▭ areas differ between the MELSEC-AnS series and the MELSEC iQ-R series and are restricted when replacing.
Check that the specifications of devices and equipment to be connected are satisfied.
4. For detailed specifications and general specifications not described in the specification comparison charts, refer to the user's manual for the module used.

(5)ERNT-ASQTY50 Terminal block (20 points) → Terminal block (18 points)

Model	MELSEC-AnS series module model	No. of output points	MELSEC iQ-R series module model
ERNT-ASQTY50	A1SY50	16 points	RY40NT5P

Note 1. A conversion adapter for replacing the MELSEC-AnS series with the MELSEC-Q series

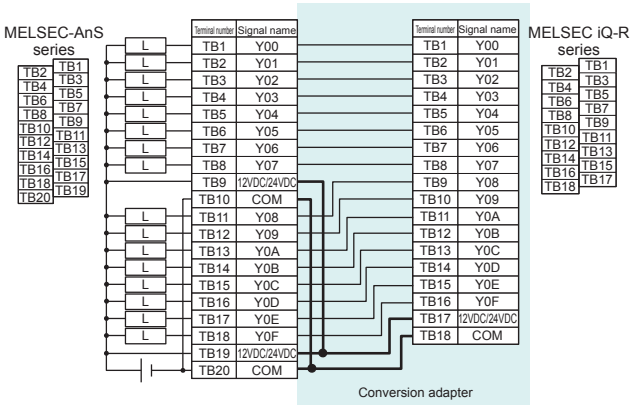

[Specification comparison chart]

Specifications \ Model		MELSEC-AnS series A1SY50 (Sink type)	MELSEC iQ-R series RY40NT5P (Sink type)
No. of output points		16 points	16 points
Rated load voltage		12/24VDC	12/24VDC
Maximum load current		0.5A/point, 2A/common	0.5A/point, 5A/common
Maximum inrush current		4A 10ms or less	1.5 to 3.5A/point (Current is restricted by overload protection function.)
Leakage current at OFF		0.1mA or less	0.1mA or less
Maximum voltage drop at ON		0.9VDC (TYP.) 0.5A 1.5VDC (MAX.) 0.5A	0.2VDC (TYP.) 0.5A 0.3VDC (MAX.) 0.5A
Response time	OFF→ON	2ms or less	0.5ms or less
	ON→OFF	2ms or less (Resistive load)	1ms or less (Rated load, resistive load)
Surge suppressor		Zener diode	Zener diode
Fuse		3.2A (1 common/set) Not replaceable	None
Internal current consumption		120mA (TYP. all points ON)	140mA (TYP. all points ON)
Wiring method for common		8 points/common	16 points/common
External interface		20-point terminal block	18-point terminal block

Note 2. Since the number of points per common changes from 8 (two circuits) to 16, when terminal numbers TB9 and TB19 as well as terminal numbers TB10 and TB20 on the existing module are used separately from each other, change the wiring.
3. Specifications in the ▭ areas differ between the MELSEC-AnS series and the MELSEC iQ-R series and are restricted when replacing.
Check that the specifications of devices and equipment to be connected are satisfied.
4. For detailed specifications and general specifications not described in the specification comparison charts, refer to the user's manual for the module used.

(6)ERNT-ASQTY80 Terminal block (20 points) → Terminal block (18 points)

Model	MELSEC-AnS series module model	No. of output points	MELSEC iQ-R series module model
ERNT-ASQTY80	A1SY80	16 points	RY40PT5P

Note 1. A conversion adapter for replacing the MELSEC-AnS series with the MELSEC-Q series

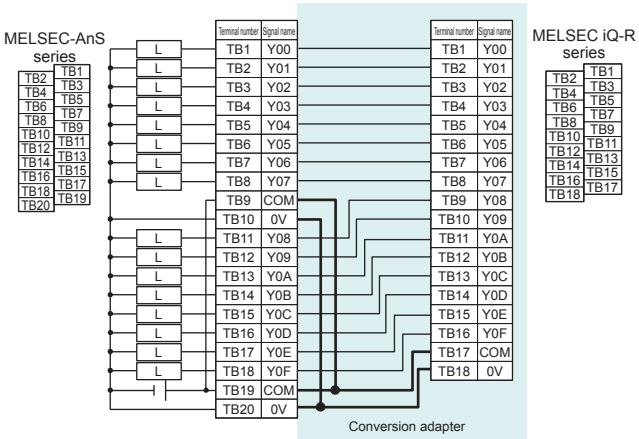

[Specification comparison chart]

Specifications \ Model		MELSEC-AnS series A1SY80 (Source type)	MELSEC iQ-R series RY40PT5P (Source type)
No. of output points		16 points	16 points
Rated load voltage		12/24VDC	12/24VDC
Maximum load current		0.8A/point, 3.2A/common	0.5A/point, 5A/common
Maximum inrush current		8A 10ms or less	1.5A/point (Current is restricted by overload protection function.)
Leakage current at OFF		0.1mA or less	0.1mA or less
Maximum voltage drop at ON		1.5VDC (MAX.) 0.8A	0.2VDC (TYP.) 0.5A, 0.3VDC (MAX.) 0.5A
Response time	OFF→ON	2ms or less	0.5ms or less
	ON→OFF	2ms or less (Resistive load)	1ms or less (Rated load, resistive load)
Surge suppressor		Zener diode	Zener diode
Fuse		5A (1 common/set) Not replaceable	None
Internal current consumption		120mA (TYP. all points ON)	130mA (TYP. all points ON)
Wiring method for common		8 points/common	16 points/common
External interface		20-point terminal block	18-point terminal block

Note 2. Since the number of points per common changes from 8 (two circuits) to 16, when terminal numbers TB9 and TB19 as well as terminal numbers TB10 and TB20 on the existing module are used separately from each other, change the wiring.
3. Specifications in the ▭ areas differ between the MELSEC-AnS series and the MELSEC iQ-R series and are restricted when replacing.
Check that the specifications of devices and equipment to be connected are satisfied.
4. For detailed specifications and general specifications not described in the specification comparison charts, refer to the user's manual for the module used.

(7)ERNT-ASLCXY81 D-Sub connector (37P) → Connector (40P)

Model	MELSEC-AnS series module model	No. of input/ output points	MELSEC iQ-R series module model
ERNT-ASLCXY81	A1SX81	32 points	RX41C4 RX41C6HS
	A1SX81-S2		
	A1SY81		RY41PT1P
	A1SY81EP		

Note 1. A conversion adapter for replacing the MELSEC-AnS series with the MELSEC-L series

A1SX81/A1SX81-S2 → RX41C4

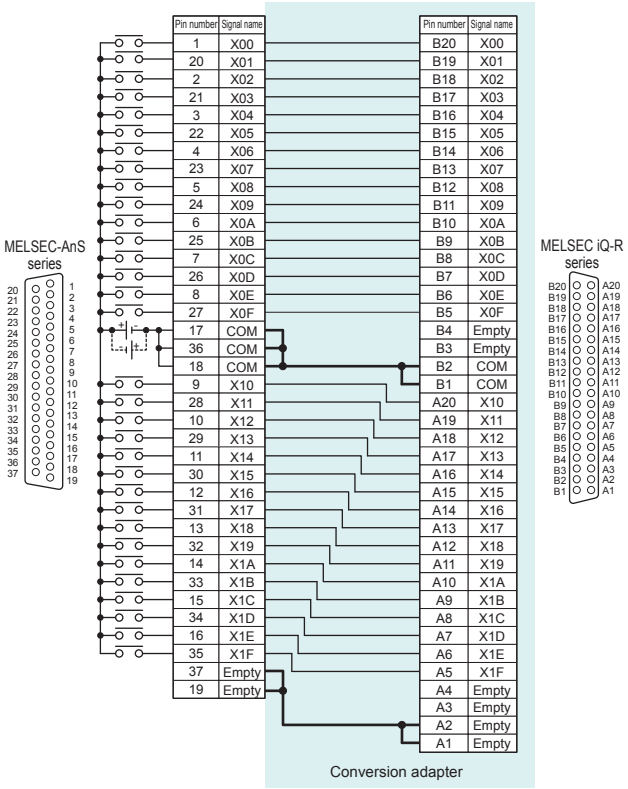

[Specification comparison chart]

Specifications \ Model		MELSEC-AnS series			MELSEC iQ-R series	
		A1SX81 (Sink/Source shared type)		A1SX81-S2 (Sink/Source shared type)	RX41C4 (Positive common/ negative common shared type)	RX41C6HS (Positive common/ negative common shared type)
No. of input points		32 points		32 points	32 points	32 points
Rated input voltage		12VDC	24VDC	24VDC	24VDC	24VDC
Rated input current		Approx. 3mA	Approx. 7mA	Approx. 7mA	4mA TYP.	6.0mA TYP.
ON voltage/ ON current		8VDC or more/ 2mA or more		13VDC or more/ 3.5mA or more	19VDC or more/ 3mA or more	19V or more/ 4mA or more
OFF voltage/ OFF current		4VDC or less/ 1mA or less		6VDC or less/ 1.7mA or less	6VDC or less/ 1.0mA or less	6V or less/ 1.7mA or less
Input resistance		Approx. 3.3kΩ		Approx. 3.3kΩ	5.3kΩ	4kΩ
Response time	OFF→ON	10ms or less (24VDC)		10ms or less	0.1/0.2/0.4/ 0.6/1/5/10/ 20/70ms or less	0.001/0.01/0.02/ 0.05/0.1/0.2/0.4/0.6/ 1/5/10/20/70ms or less
	ON→OFF	10ms or less (24VDC)		10ms or less	0.1/0.2/0.4/ 0.6/1/5/10/ 20/70ms or less	0.001/0.01/0.02/ 0.05/0.1/0.2/0.4/0.6/ 1/5/10/20/70ms or less
Internal current consumption		80mA (TYP. all points ON)		80mA (TYP. all points ON)	150mA (TYP. all points ON)	150mA (TYP. all points ON)
Wiring method for common		32 points/ common		32 points/ common	32 points/ common	32 points/common
External interface		37-pin D-Sub connector		37-pin D-Sub connector	40-pin connector	40-pin connector

Note 2. When replacing the A1SX81 and a rated input voltage of 12VDC is used, change the voltage to 24VDC.
3. Specifications in the ▭ areas differ between the MELSEC-AnS series and the MELSEC iQ-R series and are restricted when replacing.
Check that the specifications of devices and equipment to be connected are satisfied.
4. For detailed specifications and general specifications not described in the specification comparison charts, refer to the user's manual for the module used.

A1SY81/A1SY81EP → RY41PT1P

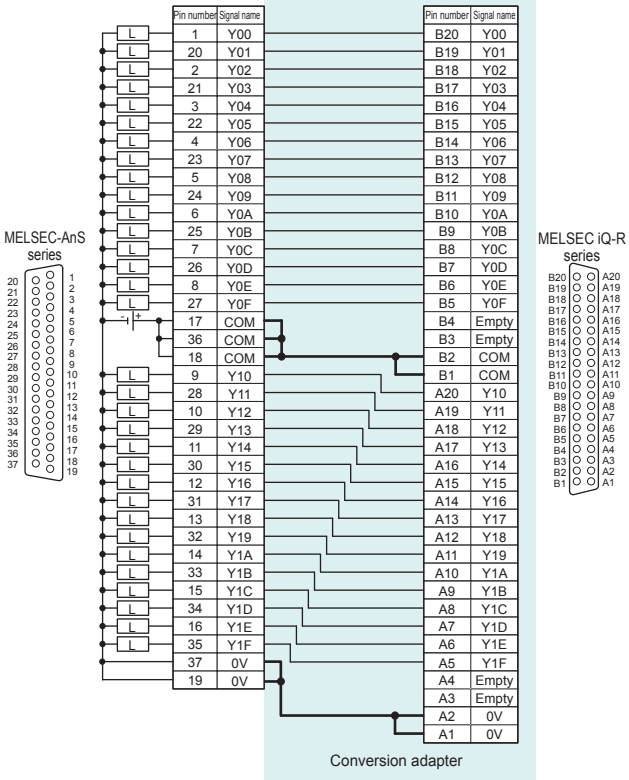

[Specification comparison chart]

Specifications \ Model		MELSEC-AnS series		MELSEC iQ-R series
		A1SY81 (Source type)	A1SY81EP (Source type)	RY41PT1P (Source type)
No. of output points		32 points	32 points	32 points
Rated load voltage		12/24VDC	12/24VDC	12/24VDC
Maximum load current		0.1A/point 2A/common	0.1A/point 2A/common (25°C) 0.05A/point 1.6A/common (55°C)	0.1A/point 2A/common
Maximum inrush current		0.4A 10ms or less	No restriction (Overload protection function)	1 to 3A/point (Current is restricted by overload protection function.)
Leakage current at OFF		0.1mA or less	0.1mA or less	0.1mA or less
Maximum voltage drop at ON		1.0VDC (TYP.) 0.1A 2.5VDC (MAX.) 0.1A	2.5VDC (0.1A Min) 3.5VDC (0.1A Max)	0.1VDC (TYP.) 0.1A 0.2VDC (MAX.) 0.1A
Response time	OFF→ON	2ms or less	0.5ms or less	0.5ms or less
	ON→OFF	2ms or less (Resistive load)	1.5ms or less (Resistive load)	1ms or less (Rated load, resistive load)
Surge suppressor		Zener diode	Clamp diode	Zener diode
Fuse		3.2A (1 common/set) Not replaceable	None	None
Protection function		None	Yes (Overheat protection, overload protection)	Yes (Overheat protection, overload protection)
Internal current consumption		500mA (TYP. all points ON)	500mA (TYP. all points ON)	190mA (TYP. all points ON)
Wiring method for common		32 points/common	32 points/common	32 points/common
External interface		37-pin D-Sub connector	37-pin D-Sub connector	40-pin connector

Note 5. Specifications in the ▭ areas differ between the MELSEC-AnS series and the MELSEC iQ-R series and are restricted when replacing.
Check that the specifications of devices and equipment to be connected are satisfied.
6. For detailed specifications and general specifications not described in the specification comparison charts, refer to the user's manual for the module used.

For Analog Modules

1-slot type

(1)ERNT-ASQT64AD Terminal block (20 points) → Terminal block (18 points)

Model	MELSEC-AnS series module model	No. of channels	MELSEC iQ-R series module model
ERNT-ASQT64AD	A1S64AD	4 channels	R60AD4

Note 1. A conversion adapter for replacing the MELSEC-AnS series with the MELSEC-Q series

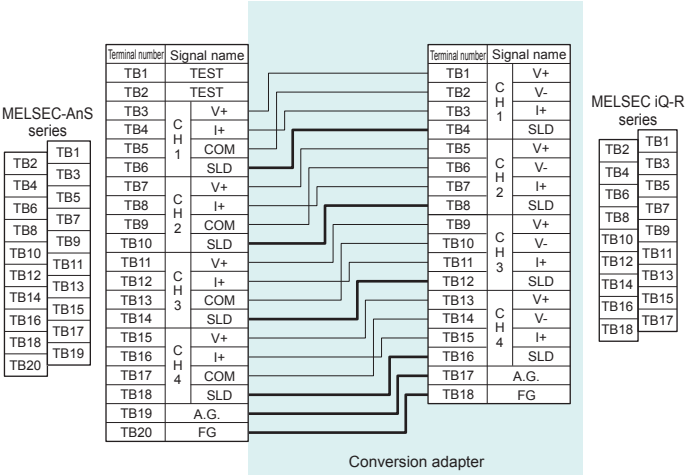

Note 2. Ground the FG terminal (terminal number TB18) on R60AD4 by using the FG terminal (terminal number TB20) on the existing terminal block.

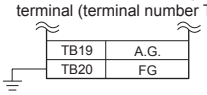

3. The R60AD4 does not have an offset/gain setting terminal. For details on the offset/gain setting, refer to the user's manual for the R60AD4.

[Specification comparison chart]

Specifications \ Model		MELSEC-AnS series A1S64AD	MELSEC iQ-R series R60AD4
Analog input	Voltage	-10 to 0 to 10VDC (Input resistance: 1MΩ)	-10 to 10VDC (Input resistance: 1MΩ)
	Current	-20 to 0 to +20mA (Input resistance: 250Ω)	0 to 20mA DC (Input resistance: 250Ω)
Digital output		16-bit signed binary When 1/4000 is set: -4096 to 4095 When 1/8000 is set: -8192 to 8191 When 1/12000 is set: -12288 to 12287	16-bit signed binary (-32768 to 32767)

I/O characteristics

Analog input	Digital output value (With a 5V/20mA gain and 0V/0mA offset)		
	When 1/4000 is set	When 1/8000 is set	When 1/12000 is set
10V	4000	8000	12000
5V or 20mA	2000	4000	6000
0V or 0mA	0	0	0
-5V or -12mA	-2000	-4000	-6000
-10V	-4000	-8000	-12000

Analog input range		Digital output	Resolution
Voltage	0 to 10V	0 to 32000	312.5μV
	0 to 5V		156.3μV
	1 to 5V		125.0μV
	1 to 5V (Extended mode)	-8000 to 32000	125.0μV
	-10 to 10V	-32000 to 32000	312.5μV
	User range setting		47.7μV
Current	0 to 20mA	0 to 32000	625.0nA
	4 to 20mA		500.0nA
	4 to 20mA (Extended mode)	-8000 to 32000	500.0nA
	User range setting	-32000 to 32000	190.7nA

Maximum resolution

	When 1/4000 is set	When 1/8000 is set	When 1/12000 is set
Voltage input	2.5mV	1.25mV	0.83mV
Current input	10μA	5μA	3.33μA

Overall accuracy

	Digital output value (With a 5V/20mA gain and 0V/0mA offset)			Ambient temperature 25±5°C: ±0.1% (±32digit) or less
	When 1/4000 is set	When 1/8000 is set	When 1/12000 is set	
±1% or less	±40	±80	±120	Ambient temperature 0 to 55°C: ±0.3% (±96digit) or less

Specifications		MELSEC-AnS series A1S64AD	MELSEC iQ-R series R60AD4
Maximum conversion speed		20ms/channel	80μs/channel
Absolute maximum input	Voltage	±15V	±15V
	Current	±30mA	±30mA
No. of analog input channels		4 channels/module	4 channels/module
Isolation method	Between input terminal and power supply of programmable controller	Photocoupler	Photocoupler
	Between channels	Non-isolation	Non-isolation
No. of occupied points		32 points	16 points
External interface		20-point terminal block	18-point terminal block
Current consumption		0.4A	0.22A

Note 4. Specifications in the ▭ areas differ between the MELSEC-AnS series and the MELSEC iQ-R series and are restricted when replacing. Check that the specifications of devices and equipment to be connected are satisfied.

5. For detailed specifications and general specifications not described in the specification comparison charts, refer to the user's manual for the module used.

• Notes for programming

(1) Since the assignment of the input/output signals (X, Y) and buffer memory addresses differs between the A1S64AD and the R60AD4, change the sequence program accordingly.

(2) Compared to the A1S64AD, the conversion speed of the R60AD4 is faster. For that reason, noise that was not picked up by the A1S64AD may be picked up by the R60AD4 as analog signals. In such cases, use the averaging processing function to eliminate the influence of noise.

(2)ERNT-ASQT68AD Terminal block (20 points) → Terminal block (18 points)

Model	MELSEC-AnS series module model	No. of channels	MELSEC iQ-R series module model
ERNT-ASQT68AD	A1S68AD (Voltage input)	8 channels	R60ADV8
	A1S68AD (Current input)		R60ADI8

Note 1. A conversion adapter for replacing the MELSEC-AnS series with the MELSEC-Q series

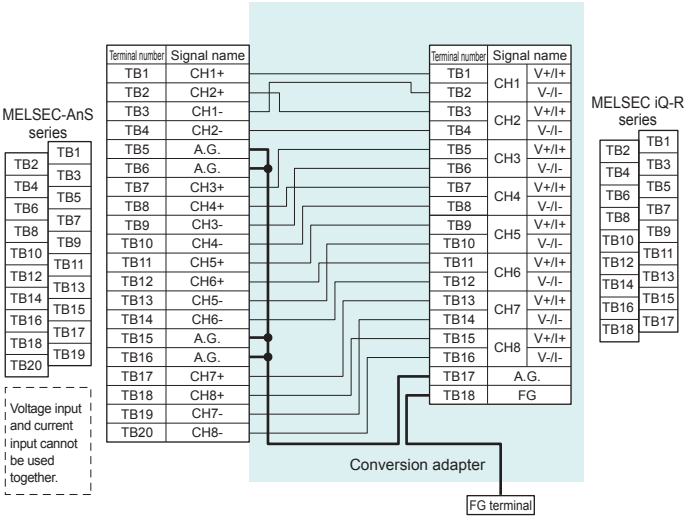

Note 2. For the R60ADV8 and the R60ADI8, voltage input and current input cannot be used together in a single module.
3. The R60ADV8 and the R60ADI8 do not have an offset/gain setting terminal. For details on the offset/gain setting, refer to the user's manual for the R60ADV8 and the R60ADI8.
4. Be sure to ground the FG terminal on the bottom of the conversion adapter.

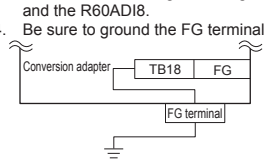

[Specification comparison chart]

Specifications \ Model		MELSEC-AnS series		MELSEC iQ-R series		
		A1S68AD		R60ADV8	R60ADI8	
Analog input	Voltage	-10 to 0 to 10VDC (Input resistance: 1MΩ)		-10 to 10VDC (Input resistance: 1MΩ)	-	
	Current	0 to 20mA (Input resistance: 250Ω)		-	0 to 20mA DC (Input resistance: 250Ω)	
Digital output		16-bit signed binary		16-bit signed binary (-32768 to 32767)		
I/O characteristics		Analog input value	Digital output value	Analog input range	Digital output	Resolution
		0 to 10V	0 to 4000	Voltage: 0 to 10V	0 to 32000	312.5μV
		-10 to 10V	-2000 to 2000	Voltage: 0 to 5V	0 to 32000	156.3μV
		0 to 5V or 0 to 20mA	0 to 4000	Voltage: 1 to 5V	0 to 32000	125.0μV
		1 to 5V or 4 to 20mA	0 to 4000	Voltage: 1 to 5V (Extended mode)	-8000 to 32000	125.0μV
Maximum resolution		Analog input value	Digital output value	Voltage: -10 to 10V	-32000 to 32000	312.5μV
		0 to 10V	2.5mV	Voltage: User range setting	-32000 to 32000	47.7μV
		-10 to 10V	5mV	Current: 0 to 20mA	0 to 32000	625.0nA
		0 to 5V	1.25mV	Current: 4 to 20mA	0 to 32000	500.0nA
		1 to 5V	1.0mV	Current: 4 to 20mA (Extended mode)	-8000 to 32000	500.0nA
		0 to 20mA	5μV			
		4 to 20mA	4μV	Current: User range setting	-32000 to 32000	190.7nA
Overall accuracy		±1% or less (Digital output value ±40)		Ambient temperature 25±5°C: ±0.1% (±32digit) or less Ambient temperature 0 to 55°C: ±0.3% (±96digit) or less		
Maximum conversion speed		0.5ms/channel (If average processing is specified even for one channel, the conversion speed becomes 1ms/channel for all channels.)		80μs/channel		
Absolute maximum input	Voltage	±35V		±15V	-	
	Current	±30mA		-	±30mA	
No. of analog input channels		8 channels/module		8 channels/module		
Isolation method	Between input terminal and power supply of programmable controller	Photocoupler		Photocoupler		
	Between channels	Non-isolation		Non-isolation		
No. of occupied points		32 points		16 points		
External interface		20-point terminal block		18-point terminal block		
Current consumption		0.4A		0.23A	0.22A	

Note 5. Specifications in the ▭ areas differ between the MELSEC-AnS series and the MELSEC iQ-R series and are restricted when replacing.
Check that the specifications of devices and equipment to be connected are satisfied.
6. For detailed specifications and general specifications not described in the specification comparison charts, refer to the user's manual for the module used.

• Notes for programming
(1) Since the assignment of the input/output signals (X, Y) and buffer memory addresses differs between the A1S68AD and the R60ADV8/R60ADI8, change the sequence program accordingly.
(2) Compared to the A1S68AD, the conversion speed of the R60ADV8 and the R60ADI8 is faster. For that reason, noise that was not picked up by the A1S64AD may be picked up by the R60ADV8 and the R60ADI8 as analog signals. In such cases, use the averaging processing function to eliminate the influence of noise.

(3)ERNT-ASQT62DA Terminal block (20 points) → Terminal block (18 points)

Model	MELSEC-AnS series module model	No. of channels	MELSEC iQ-R series module model
ERNT-ASQT62DA	A1S62DA	2 channels	R60DA4

Note 1. A conversion adapter for replacing the MELSEC-AnS series with the MELSEC-Q series

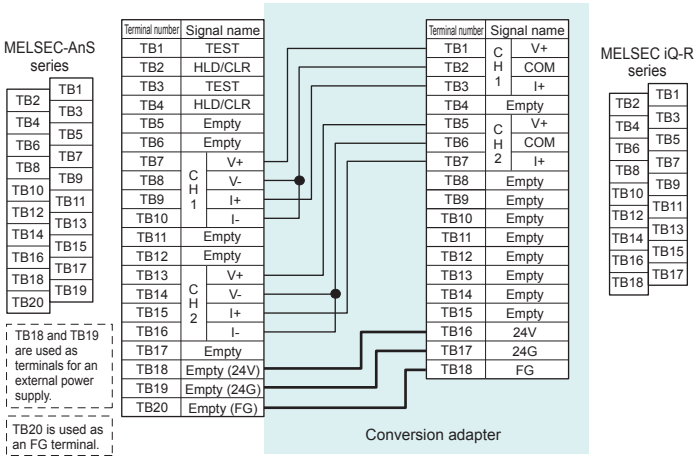

Note 2. Since power must be supplied to the R60DA4, use empty terminals (TB18, TB19) on the existing terminal block to connect a 24VDC power supply.

3. Ground the FG terminal (terminal number TB18) on the R60DA4 by using an empty terminal (terminal number TB20) on the existing terminal block.

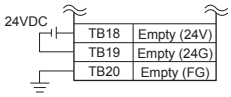

4. R60DA4 does not have an offset/gain setting terminal or analog output hold/clear setting terminal. Configure the analog output hold/clear setting with the R60DA4 intelligent function module switch setting. For details on the offset/gain setting and analog output hold/clear setting, refer to the user's manual for the R60DA4.

5. CH3 and CH4 on the R60DA4 cannot be used. (They are not connected inside the conversion adapter.)

[Specification comparison chart]

Item \ Model		MELSEC-AnS series	MELSEC iQ-R series
		A1S62DA	R60DA4
Digital input		16-bit signed binary Voltage output / Current output 1/4000: -4000 to 4000 / 0 to 4000 1/8000: -8000 to 8000 / 0 to 8000 1/12000: -12000 to 0 to 12000 / 0 to 12000	16-bit signed binary (-32768 to 32767)
Analog output	Voltage	-10 to 0 to 10VDC (External load resistance value: 2kΩ to 1MΩ)	-10 to 10VDC (External load resistance value: 1kΩ or more) 0 to 5VDC (External load resistance value: 500Ω or more)
	Current	0 to 20mA DC (External load resistance value: 0Ω to 600Ω)	0 to 20mA DC (External load resistance value: 0Ω to 600Ω)
I/O characteristics		Voltage: Digital input value Resolution: 1/4000: 4000, 2000, 0, -2000, -4000 1/8000: 8000, 4000, 0, -8000 1/12000: 12000, 6000, 0, -12000 Analog output value: 10V, 5V, 0V, -5V, -10V Current: Digital input value 1/4000: 4000, 2000, 0 1/8000: 8000, 4000, 0 1/12000: 12000, 6000, 0 Analog output value: 20mA, 12mA, 4mA	Analog output range / Digital value / Resolution Voltage: 0 to 5V, 0 to 32000, 156.3μV Voltage: 1 to 5V, 0 to 32000, 125.0μV Voltage: -10 to 10V, -32000 to 32000, 312.5μV Voltage: User range setting (Voltage), -32000 to 32000, 312.5μV Current: 0 to 20mA, 0 to 32000, 625.0nA Current: 4 to 20mA, 0 to 32000, 500.0nA Current: User range setting (Current), -32000 to 32000, 350.9nA
Maximum resolution		Voltage output / Current output 1/4000: 2.5mV (10V) / 5μA (20mA) 1/8000: 1.25mV (10V) / 2.5μA (20mA) 1/12000: 0.83mV (10V) / 1.7μA (20mA)	
Overall accuracy		Voltage: ±1.0% (±100mV) Current: ±1.0% (±200μA)	Ambient temperature 25±5°C: ±0.1% or less (Voltage: ±10mV, Current: ±20μA) Ambient temperature 0 to 55°C: ±0.3% or less (Voltage: ±30mV, Current: ±60μA)
Maximum conversion speed		25ms or less/2 channels (One channel is also the same length of time.)	80μs/channel
Absolute maximum output	Voltage	±12V	-
	Current	28mA	-
No. of analog output channels		2 channels/module	4 channels/module
Isolation method	Between output terminal and power supply of programmable controller	Photocoupler	Photocoupler
	Between channels	Non-isolation	Non-isolation
	Between external power supply and analog output	-	Transformer
No. of occupied points		32 points	16 points
External interface		20-point terminal block	18-point terminal block
Current consumption		0.80A	0.16A
External power supply	Voltage	-	24VDC +20%, -15%
	Current	-	0.14A

Note 6. Specifications in the ▭ areas differ between the MELSEC-AnS series and the MELSEC iQ-R series and are restricted when replacing. Check that the specifications of devices and equipment to be connected are satisfied.

7. For detailed specifications and general specifications not described in the specification comparison charts, refer to the user's manual for the module used.

• Note for programming

(1) Since the assignment of the input/output signals (X, Y) and buffer memory addresses differs between the A1S62DA and the R60DA4, change the sequence program accordingly.

(4)ERNT-ASQT68DA Terminal block (20 points) → Terminal block (18 points)

Model	MELSEC-AnS series module model	No. of channels	MELSEC iQ-R series module model
ERNT-ASQT68DA	A1S68DAV	8 channels	R60DAV8
	A1S68DAI		R60DAI8

Note 1. A conversion adapter for replacing the MELSEC-AnS series with the MELSEC-Q series

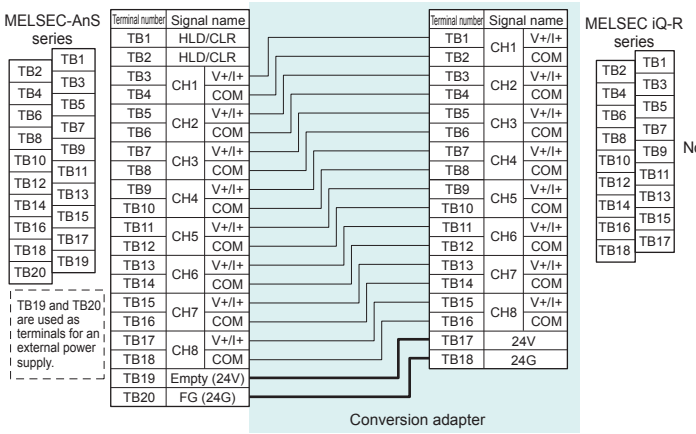

Note 2. For supplying power to the R60DAV8 or the R60DAI8 side (power supply terminals (TB17, TB18)), use terminal numbers TB19 and TB20 on the existing terminal block. Note that the FG wiring connected to the existing terminal block is no longer required.

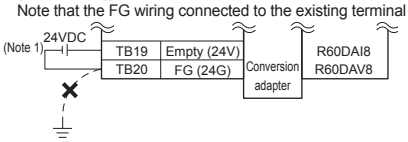

3. The R60DAV8 and the R60DAI8 do not have an offset/gain setting terminal or analog output hold/clear setting terminal.
Configure the analog output hold/clear setting with the R60DAV8 or the R60DAI8 intelligent function module switch setting.
For details on the offset/gain setting and analog output hold/clear setting, refer to the user's manual for the R60DAV8 and the R60DAI8.

[Specification comparison chart]

Specifications \ Model		MELSEC-AnS series		MELSEC iQ-R series			
		A1S68DAV		R60DAV8			
Digital input		16-bit signed binary (-2048 to 2047)		16-bit signed binary (-32768 to 32767)			
Analog output		-10 to 0 to 10VDC (External load resistance value: 2kΩ to 1MΩ)		-10 to 10VDC (External load resistance value: 1kΩ or more) 0 to 5VDC (External load resistance value: 500Ω or more)			
I/O characteristics		Digital input value	Analog output value	Analog output range		Digital value	Resolution
		2000	10V	Voltage	0 to 5V	0 to 32000	156.3μV
		1000	5V		1 to 5V		125.0μV
		0	0V		-10V to 10V	-32000 to 32000	312.5μV
		-1000	-5V				
		-2000	-10V		User range setting (Voltage)		312.5μV
Maximum resolution		5mV					
Overall accuracy		±1.0% (±100mV)		Ambient temperature 25±5°C: ±0.1% or less (Voltage: ±10mV) Ambient temperature 0±55°C: ±0.3% or less (Voltage: ±30mV)			
Maximum conversion speed		4ms or less/8 channels		80μs/channel			
Absolute maximum output		-		-			
No. of analog output channels		8 channels/module		8 channels/module			
Isolation method	Between output terminal and power supply of programmable controller	Photocoupler		Photocoupler			
	Between channels	Non-isolation		Non-isolation			
	Between external power supply and analog output	-		Transformer			
No. of occupied points		32 points		16 points			
External interface		20-point terminal block		18-point terminal block			
Current consumption		0.65A		0.16A			
External power supply	Voltage	-		24VDC +20%, -15%			
	Current	-		0.16A			

Specifications \ Model		MELSEC-AnS series		MELSEC iQ-R series			
		A1S68DAI		R60DAI8			
Digital input		16-bit signed binary (0 to 4096)		16-bit signed binary (-32768 to 32767)			
Analog output		4 to 20mA DC (External load resistance value: 0 to 600Ω)		0 to 20mA DC (External load resistance value: 0Ω to 600Ω)			
I/O characteristics		Digital input value	Analog output value	Analog output range		Digital value	Resolution
		4000	20mA	Current	0 to 20mA	0 to 32000	625.0nA
		2000	12mA		4 to 20mA		500.0nA
		0	4mA		User range setting (Voltage)	-32000 to 32000	350.9nA
Maximum resolution		4μA					
Overall accuracy		±1.0% (±200μA)		Ambient temperature 25±5°C±0.1% or less (Current: ±20μA) Ambient temperature 0 to 55°C±0.3% or less (Current: ±60μA)			
Maximum conversion speed		4ms or less/8 channels		80μs/channel			
Absolute maximum output		-		-			
No. of analog output channels		8 channels/module		8 channels/module			
Isolation method	Between output terminal and power supply of programmable controller	Photocoupler		Photocoupler			
	Between channels	Non-isolation		Non-isolation			
	Between external power supply and analog output	-		Transformer			
No. of occupied points		32 points		16 points			
External interface		20-point terminal block		18-point terminal block			
Current consumption		0.85A		0.16A			
External power supply	Voltage	-		24VDC +20%, -15%			
	Current	-		0.26A			

Note 4. Specifications in the ▭ areas differ between the MELSEC-AnS series and the MELSEC iQ-R series and are restricted when replacing.
Check that the specifications of devices and equipment to be connected are satisfied.
5. For detailed specifications and general specifications not described in the specification comparison charts, refer to the user's manual for the module used.

• Note for programming
(1) Since the assignment of the input/output signals (X, Y) and buffer memory addresses differs between the A1S68DAV/A1S68DAI and the R60DAV8//R60DAI8, change the sequence program accordingly.

For High-speed Counter Modules

1-slot type

(1)ERNT-ASLTD61 Terminal block (20 points) → Connector (40P)

Model	MELSEC-AnS series module model	No. of channels	MELSEC iQ-R series module model
ERNT-ASLTD61	A1SD61	1 channel	RD62P2

Note 1. A conversion adapter for replacing the MELSEC-AnS series with the MELSEC-L series

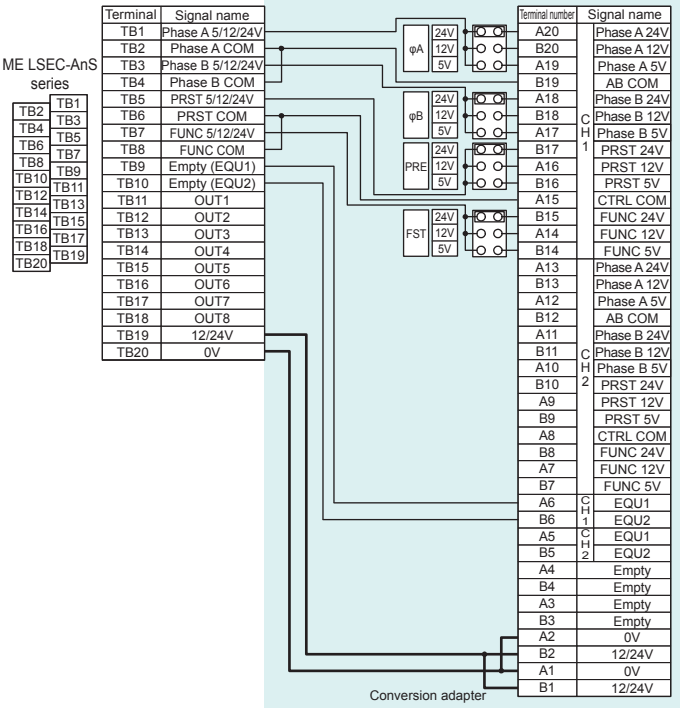

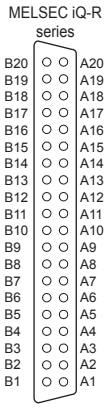

Note 2. For the phase A pulse input φA, the phase B pulse input φB, the preset input PRE, and the function start input FST, set the short bars for the setting pins inside the conversion adapter to match the input voltage: 24V for 24V input, 12V for 12V input, and 5V for 5V input. Note that all of the short bars are set to 24V by factory default.
Also, if a voltage higher than the voltage set with the setting pins is input, the MELSEC iQ-R series module will fail.

3. Since the RD62P2 does not have the limit switch output function of the A1SD61, terminals OUT1 (TB11) to OUT8 (TB18) cannot be used.
To use the coincidence output function (terminals EQU1 (A6) and EQU2 (B6)) of the RD62P2 instead, use empty terminals (EQU1 (TB9) and EQU2 (TB10)) of the A1SD61.

Note that the specifications differ, such as having a fewer number of settings.

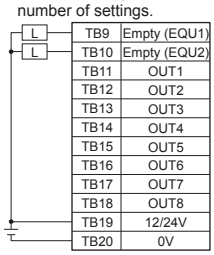

4. After setting the voltage switch setting pins, connect the external wiring.

[Specification comparison chart]

Specifications \ Model			MELSEC-AnS series		MELSEC iQ-R series		
			A1SD61		RD62P2		
Counting speed switch setting			Setting pin based switching		Intelligent function module switch setting based switching		
			50k side	10k side	200k (100k to 200kPPS)	100k (10k to 100kPPS)	10k (10kPPS or less)
No. of channels			1 channel		2 channels		
Count input signal	Phases		1-phase input, 2-phase input		1-phase input (1x/2x), 2-phase input (1x/2x/4x), CW/CCW input		
	Signal level (φA, φB)		5/12/24VDC 2 to 5mA				
Counter	Counting speed (max.)	1-phase input	50kPPS	10kPPS	200kPPS (Note 5)	100kPPS (Note 5)	10kPPS (Note 5)
		2-phase input	50kPPS	7kPPS			
	Counting range		32-bit signed binary (-2147483648 to 2147483647)				
	Type		UP/DOWN preset counter + Ring counter function				
	Minimum count pulse width (Duty ratio: 50%)		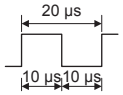 (1- or 2-phase input)	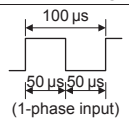 (1-phase input) 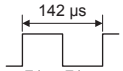 (2-phase input)	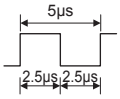 (Minimum phase difference during 2-phase input: 1.25 μs)	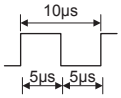 (Minimum phase difference during 2-phase input: 2.5 μs)	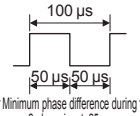 (Minimum phase difference during 2-phase input: 25 μs)
Limit switch output	Comparison range		32-bit signed binary		-		
	Comparison result		Normally open contact operation: dog ON address ≤ count value ≤ dog OFF address Normally closed contact operation: dog OFF address ≤ count value ≤ dog ON address		-		
Coincidence output	Comparison range		-		32-bit signed binary		
	Comparison result		-		Setting value < Count value, Setting value = Count value, Setting value > Count value		
External input	Preset		5/12/24VDC 2 to 5mA		5/12/24VDC 7 to 10mA		
	Function start						
External output	Limit switch output		Transistor (Open collector) output 12/24VDC 0.1A/point 0.8A/common		-		
	Coincidence output		-		Transistor (Sink type) output, 2 points/channel 12/24VDC 0.5A/point 2A/common		
No. of occupied I/O points			32 points		16 points		
Connection method			20-point terminal block		40-pin connector		
Internal current consumption (5VDC)			0.35A		0.11A		

Note 5. The counting speed is affected by the pulse rise time and fall time (t). The countable counting speeds are as shown in the table below. Note that if pulses whose rise or fall time is great are counted, a count error may occur.

Rise/Fall time \ Counting speed switch setting	Shared by 1-phase input and 2-phase input		
	200k	100k	10k
t = 1.25μs or less	200kPPS	100kPPS	10kPPS
t = 2.5μs or less	100kPPS	100kPPS	10kPPS
t = 25μs or less	-	10kPPS	10kPPS
t = 500μs	-	-	500PPS

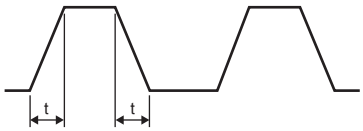

6. Specifications in the ▭ areas differ between the MELSEC-AnS series and the MELSEC iQ-R series and are restricted when replacing. Check that the specifications of devices and equipment to be connected are satisfied.
7. For detailed specifications and general specifications not described in the specification comparison charts, refer to the user's manual for the module used.

• Notes for programming
(1) Since the assignment of the input/output signals (X, Y) and buffer memory addresses differs between the A1SD61 and the RD62P2, change the sequence program accordingly.
(2) For the limit switch output function of the A1SD61, the coincidence output function of the RD62P2 is used instead. Change the sequence program accordingly.
(3) For the RD62P2, use the I/O signals (X, Y) and buffer memory address on CH1. Operation is not possible on CH2.
(4) For the A1SD61, the counting speed setting is performed with the setting pins. For the RD62P2, it is performed with the intelligent function module switch setting.

(2)ERNT-ASLTD62 Terminal block (20 points) → Connector (40P)

Model	MELSEC-AnS series module model	No. of channels	MELSEC iQ-R series module model
ERNT-ASLTD62	A1SD62	2 channels	RD62P2
	A1SD62E		RD62P2E

Note 1. A conversion adapter for replacing the MELSEC-AnS series with the MELSEC-L series

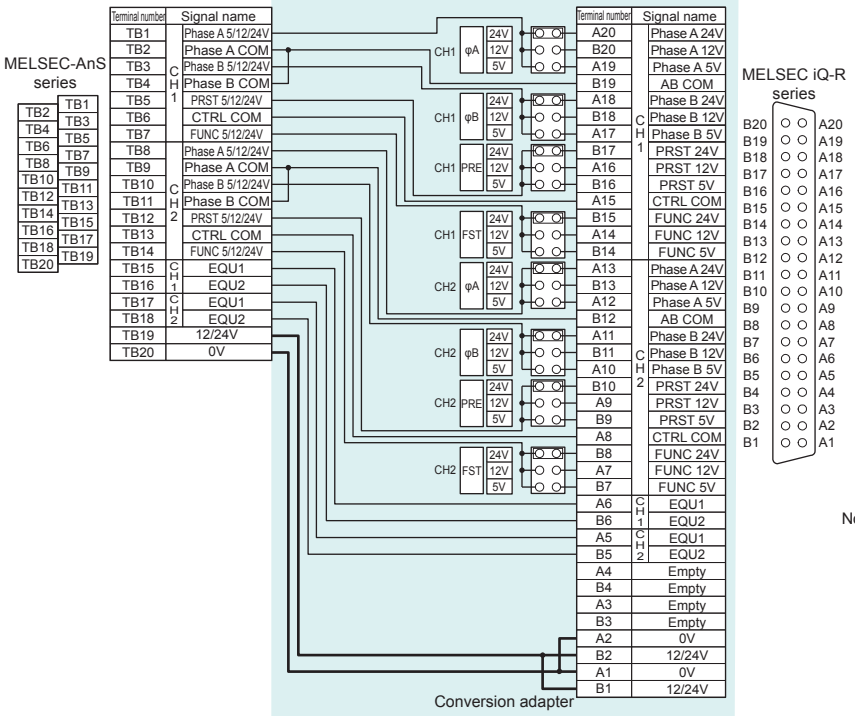

Note 2. For the phase A pulse input φA, the phase B pulse input φB, the preset input PRE, and the function start input FST, set the short bars for the setting pins inside the conversion adapter to match the input voltage: 24V for 24V input, 12V for 12V input, and 5V for 5V input. Note that all of the short bars are set to 24V by factory default. Also, if a voltage higher than the voltage set with the setting pins is input, the MELSEC iQ-R series module will fail.

3. After setting the voltage switch setting pins, connect the external wiring.

[Specification comparison chart]

Specifications \ Model			MELSEC-AnS series		MELSEC iQ-R series		
			A1SD62		RD62P2		
Counting speed switch setting			Setting pin based switching		Intelligent function module switch setting based switching		
			100k side	10k side	200k (100k to 200kPPS)	100k (10k to 100kPPS)	10k (10kPPS or less)
No. of channels			2 channels				
Count input signal	Phases		1-phase input, 2-phase input		1-phase input (1x/2x), 2-phase input (1x/2x/4x), CW/CCW input		
	Signal level (φA, φB)		5/12/24VDC 2 to 5mA				
Counter	Counting speed (max.)	1-phase input	100kPPS	10kPPS	200kPPS (Note 4)	100kPPS (Note 4)	10kPPS (Note 4)
		2-phase input	100kPPS	7kPPS			
	Counting range		24-bit binary (0 to 16777215)		32-bit signed binary (-2147483648 to 2147483647)		
	Type		UP/DOWN preset counter + Ring counter function				
	Minimum count pulse width (Duty ratio: 50%)		10 μs; 5 μs, 5 μs (1- or 2-phase input)	100 μs; 50 μs, 50 μs (1-phase input); 142 μs; 71μs, 71μs (2-phase input)	5μs; 2.5μs, 2.5μs (Minimum phase difference during 2-phase input: 1.25 μs)	10μs; 5μs, 5μs (Minimum phase difference during 2-phase input: 2.5 μs)	100 μs; 50 μs, 50 μs (Minimum phase difference during 2-phase input: 25 μs)
Coincidence output	Comparison range		24-bit binary		32-bit signed binary		
	Comparison result		Setting value < Count value, Setting value = Count value, Setting value > Count value				
External input	Preset		5/12/24VDC 2 to 5mA		5/12/24VDC 7 to 10mA		
	Function start						
External output	Coincidence output		Transistor (Sink type) output, 2 points/channel 12/24VDC 0.5A/point 2A/common				
No. of occupied I/O points			32 points		16 points		
Connection method			20-point terminal block		40-pin connector		
Internal current consumption (5VDC)			0.1A		0.11A		

Specifications \ Model			MELSEC-AnS series		MELSEC iQ-R series		
			A1SD62E		RD62P2E		
Counting speed switch setting			Setting pin based switching		Intelligent function module switch setting based switching		
			100k side	10k side	200k (100k to 200kPPS)	100k (10k to 100kPPS)	10k (10kPPS or less)
No. of channels			2 channels				
Count Input signal	Phases		1-phase input, 2-phase input		1-phase input (1x/2x), 2-phase input (1x/2x/4x), CW/CCW input		
	Signal level (φA, φB)		5/12/24VDC 2 to 5mA				
Counter	Maximum counting speed	1-phase input	100kPPS	10kPPS	200kPPS (Note 4)	100kPPS (Note 4)	10kPPS (Note 4)
		2-phase input	100kPPS	7kPPS			
	Counting range		24-bit binary (0 to 16777215)		32-bit signed binary (-2147483648 to 2147483647)		
	Type		UP/DOWN preset counter + Ring counter function				
	Minimum count pulse width (Duty ratio: 50%)		10 μs; 5 μs, 5 μs (1- or 2-phase input)	100 μs; 50 μs, 50 μs (1-phase input); 142 μs; 71μs, 71μs (2-phase input)	5μs; 2.5μs, 2.5μs (Minimum phase difference during 2-phase input: 1.25 μs)	10μs; 5μs, 5μs (Minimum phase difference during 2-phase input: 2.5 μs)	100 μs; 50 μs, 50 μs (Minimum phase difference during 2-phase input: 25 μs)
Coincidence output	Comparison range		24-bit binary		32-bit signed binary		
	Comparison result		Setting value < Count value, Setting value = Count value, Setting value > Count value				
External input	Preset		5/12/24VDC 2 to 5mA		5/12/24VDC 7 to 10mA		
	Function start						
External output	Coincidence output		Transistor (Source type) output, 2 points/channel 12/24VDC 0.5A/point 2A/common				
No. of occupied I/O points			32 points		16 points		
Connection method			20-point terminal block		40-pin connector		
Internal current consumption (5VDC)			0.1A		0.20A		

Note 4. The counting speed is affected by the pulse rise time and fall time (t). The countable counting speeds are as shown in the table below. Note that if pulses whose rise or fall time is great are counted, a count error may occur.

Rise/Fall time \ Counting speed switch setting	Shared by 1-phase input and 2-phase input		
	200k	100k	10k
t = 1.25μs or less	200kPPS	100kPPS	10kPPS
t = 1.25μs or less	100kPPS	100kPPS	10kPPS
t = 25μs or less	-	10kPPS	10kPPS
t = 500μs	-	-	500PPS

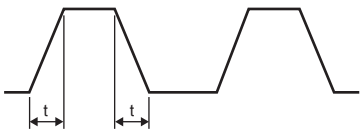

5. Specifications in the ▭ areas differ between the MELSEC-AnS series and the MELSEC iQ-R series and are restricted when replacing. Check that the specifications of devices and equipment to be connected are satisfied.
6. For detailed specifications and general specifications not described in the specification comparison charts, refer to the user's manual for the module used.

• Notes for programming
(1) Since the assignment of the input/output signals (X, Y) and buffer memory addresses differs between the A1SD62 and the RD62P2, change the sequence program accordingly.
(2) For the A1SD62, the counting speed setting is performed with the setting pins. For the RD62P2, it is performed with the intelligent function module switch setting.
(3) Since the assignment of I/O signals (X, Y) and buffer memory addresses differs between the A1SD62E compared to the RD62P2E, change the sequence program accordingly.
(4) For the A1SD62E, the counting speed setting is performed with the setting pins. For the RD62P2E, it is performed with the intelligent function module switch setting.

Base Adapter

Specifications

A MELSEC iQ-R series base unit can be mounted by using the mounting holes of the MELSEC-AnS series base unit. (No need to drill any additional mounting holes.)

Model (*1)	Specifications		Remarks
	MELSEC-AnS series compatible module	MELSEC iQ-R series compatible module	
ERNT-ASQB38N	A1S38B/A1S38HB/A1S38HBEU	R38B	To use the Q7BAT-SET, keep the CPU module (before mounting the Q7BAT-SET) mounted to its base adapter when mounting the Q7BAT-SET to the CPU module.
ERNT-ASQB35N	A1S35B	R35B	
ERNT-ASQB00JN	A1SJCPU/A1SJCPU-S3/A1SJHCPU	R35B	
ERNT-ASQB68N	A1S68B	R68B	
ERNT-ASQB65N	A1S65B	R65B	
ERNT-ASQB58N	A1S58B	R68B (*2)	

* 1: A base adapter for replacing the MELSEC-AnS series with the MELSEC-Q series
* 2: Since base units without a power supply do not exist in the MELSEC iQ-R series, the model here is the extension base unit after replacement.

Mounting Dimensions

Replacement using an ERNT-ASQB N base adapter

- Since the dimensions of the base adapter mounting holes (four points) are the same as those of the mounting holes on the MELSEC-AnS series base unit, there is no need to drill any additional mounting holes on the control panel.
- The slot positions of modules differ between the MELSEC-AnS series and the MELSEC iQ-R series. After replacement, adjust the lengths of the cables.

◎ **MELSEC iQ-R series**

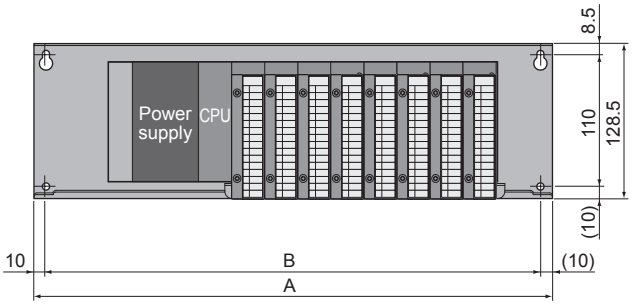

◎ **(Reference) MELSEC-AnS series**

Unit: mm

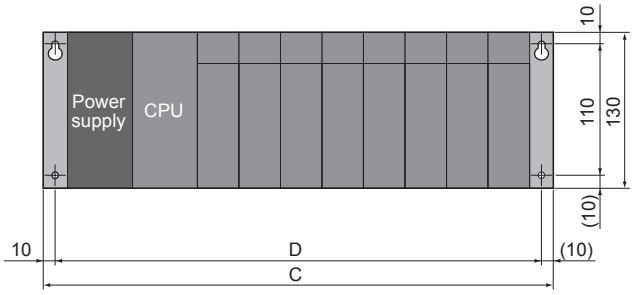

Model	A	B	MELSEC-AnS series base unit model	C	D
ERNT-ASQB38N	430	410	A1S38B/A1S38HB/A1S38HBEU	430	410
ERNT-ASQB35N	325	305	A1S35B	325	305
ERNT-ASQB00JN	330	310	A1SJCPU	330	310
			A1SJCPU-S3		
			A1SJHCPU		
ERNT-ASQB68N	420	400	A1S68B	420	400
ERNT-ASQB65N	315	295	A1S65B	315	295
ERNT-ASQB58N	365	345	A1S58B	365	345

Memo

Usage Cautions

A conversion adapter is a product that converts the pin assignments of a MELSEC-AnS series module into the pin assignments of a MELSEC iQ-R series module.
To check differences in performance, functionality, I/O signals for CPU, buffer memory addresses, and other items when replacing the MELSEC-AnS series with the MELSEC iQ-R series, be sure to refer to the manual for each MELSEC iQ-R series module before using the product.

Module Width

(1) Since the width of MELSEC iQ-R series modules is smaller (MELSEC-AnS series: 34.5mm → MELSEC iQ-R series: 27.8mm), the wiring area becomes smaller as well. Check the wiring area when mounting a conversion adapter.

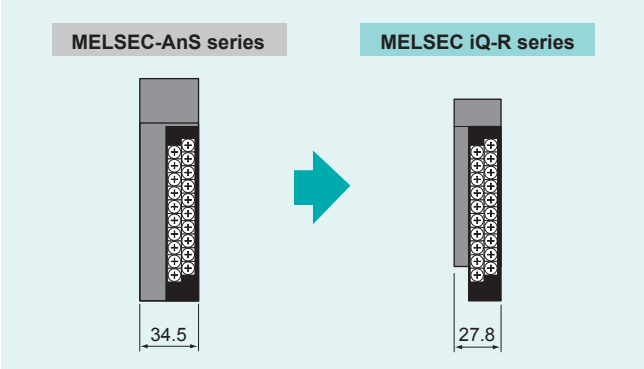

(2) If the wiring causes interference with adjacent modules, take an action such as lifting the wiring forward to prevent interference.

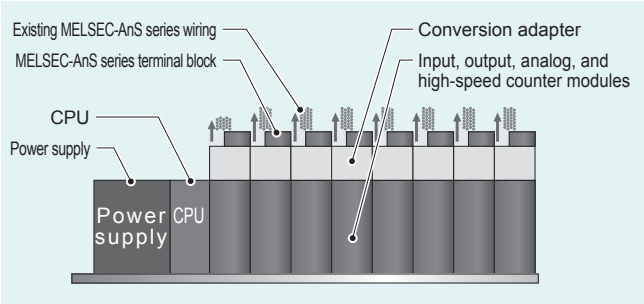

(3) If interference still occurs, keep the next slot open to secure a space for wiring.

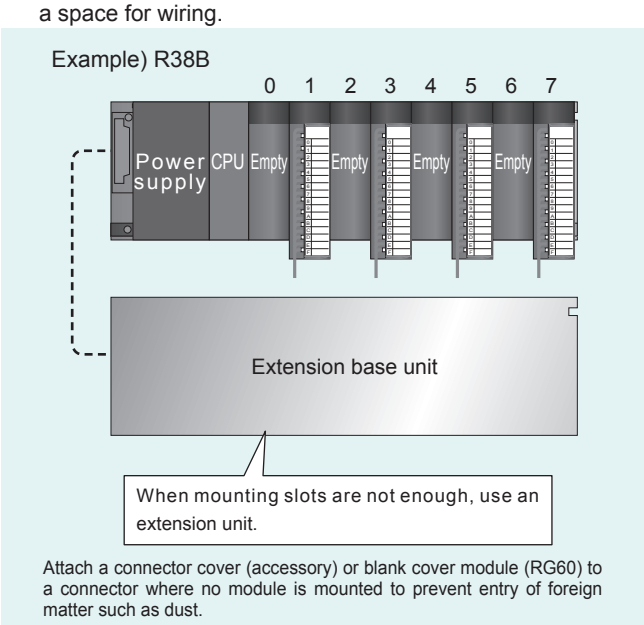

Attach a connector cover (accessory) or blank cover module (RG60) to a connector where no module is mounted to prevent entry of foreign matter such as dust.

(4) If the wiring space is taken into account, the number of replacement modules is as follows.

MELSEC-AnS series base unit model	Replaced with		
	MELSEC iQ-R series base unit model	Mounting method	No. of replaceable modules
A1S38B A1S38HB A1S38HBEU	R38B	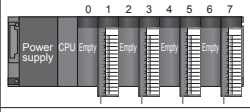	4 modules
A1S35B	R35B	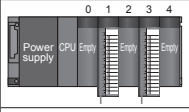	2 modules
A1S68B A1S58B	R68B	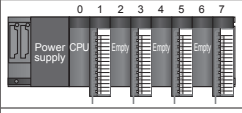	4 modules
A1S65B	R65B	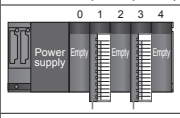	2 modules
A1SJCPU A1SJCPU-S3 A1SJHCPU	R35B	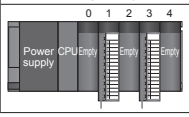	2 modules

Depth / Height

When mounting a base adapter

Since the depth becomes larger, check that it can be mounted.
The height dimension also becomes larger in the downward direction, depending on how replacement is executed, so check that it can be mounted.

MELSEC-AnS : MELSEC-AnS series MELSEC iQ-R : MELSEC iQ-R series

Model	ERNT-ASQTXY10 ERNT-ASQTY22 ERNT-ASQTX40 ERNT-ASQTY40 ERNT-ASQTY50 ERNT-ASQTY80 ERNT-ASQT64AD ERNT-ASQT62DA ERNT-ASQT68DA	ERNT-ASQT68AD
Depth	66.9 mm increase	66.9 mm increase
Height	No increase	11 mm increase
Mounting diagram	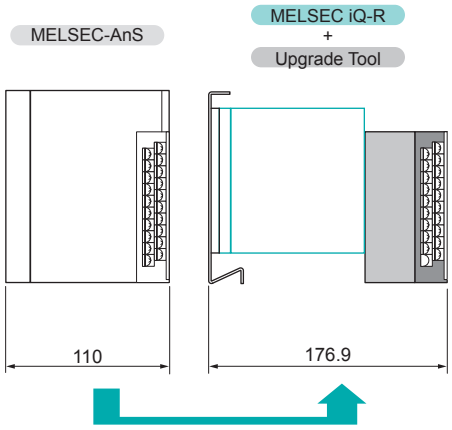 66.9 mm increase	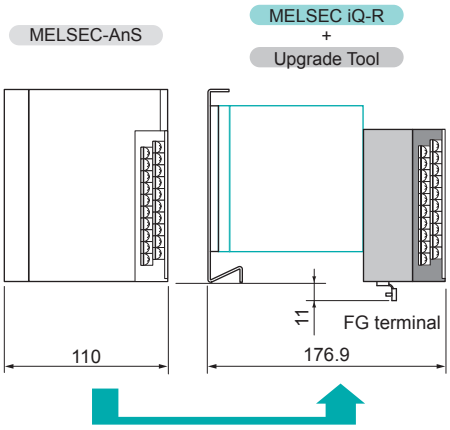 66.9 mm increase

Model	ERNT-ASLTD61 ERNT-ASLTD62	ERNT-ASLCXY81
Depth	66.9 mm increase	59.6 mm increase
Height	6.4 mm increase	6.4 mm increase
Mounting diagram	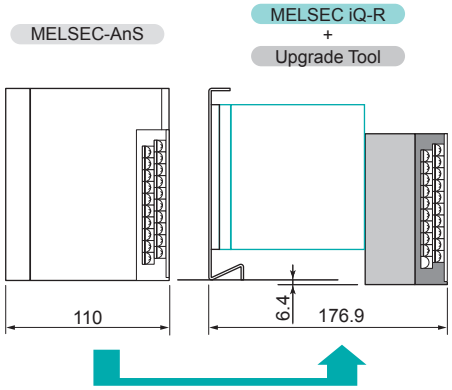 66.9 mm increase	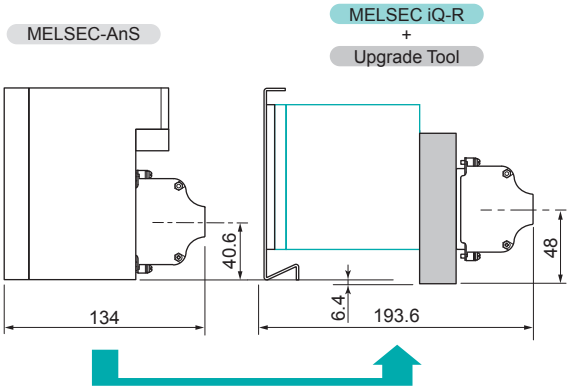 59.6 mm increase

*: Each depth is measured from the panel surface.
- MELSEC-AnS series: Base unit + Input/output/analog/high-speed counter modules + Terminal block
- MELSEC iQ-R series + Upgrade tool: Base adapter + Base unit + Input/output/analog/high-speed counter modules + Conversion adapter + Terminal block

When using the DIN rail

Since the depth becomes larger, and the height becomes larger in the downward direction, check that it can be mounted.

MELSEC-AnS : MELSEC-AnS series MELSEC iQ-R : MELSEC iQ-R series

Model	ERNT-ASQTXY10 ERNT-ASQTY22 ERNT-ASQTX40 ERNT-ASQTY40 ERNT-ASQTY50 ERNT-ASQTY80 ERNT-ASQT64AD ERNT-ASQT62DA ERNT-ASQT68DA	ERNT-ASQT68AD
Depth	63.9 mm increase	63.9 mm increase
Height	4 mm increase	15.5 mm increase
Mounting diagram	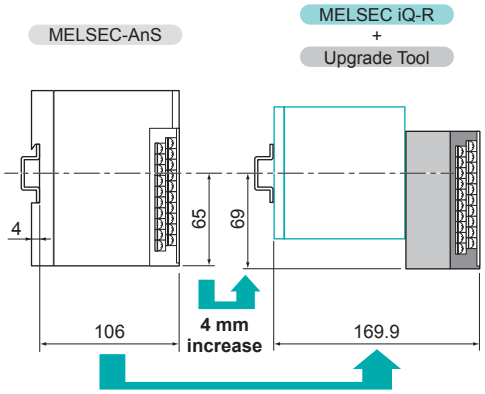	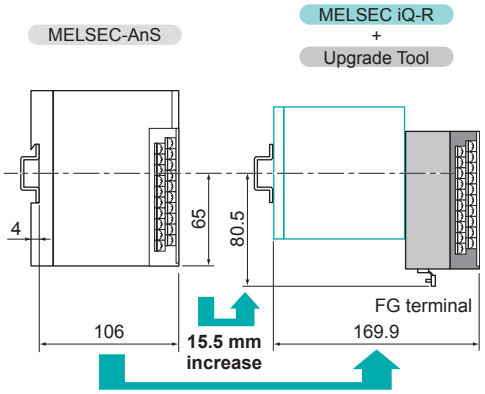

Model	ERNT-ASLTD61 ERNT-ASLTD62	ERNT-ASLCXY81
Depth	63.9 mm increase	56.6 mm increase
Height	10.4 mm increase	10.4 mm increase
Mounting diagram	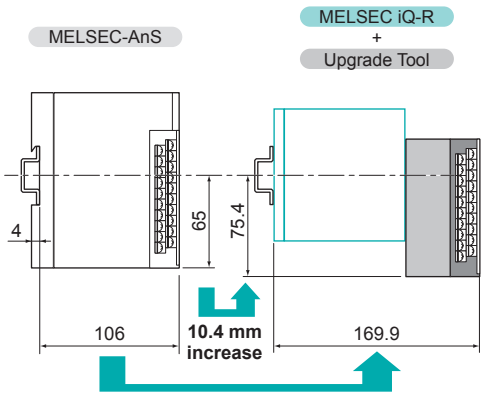	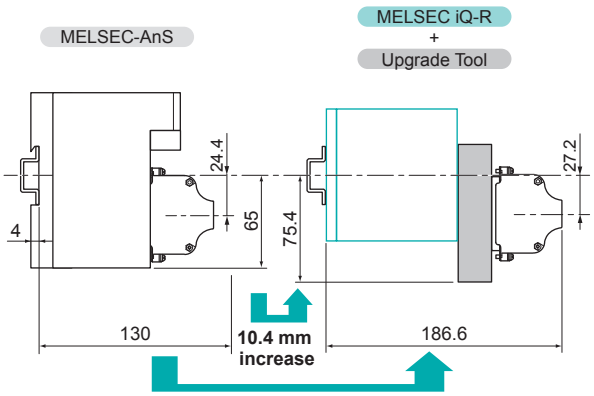

*: Each depth is measured from the panel surface.
- MELSEC-AnS series: DIN rail + Base unit + Input/output/analog/high-speed counter modules + Terminal block
- MELSEC iQ-R series + Upgrade tool: DIN rail + Base unit + Input/output/analog/high-speed counter modules + Conversion adapter + Terminal block

Terminal Block Cover

The terminal block cover for the MELSEC-AnS series is larger than the width of modules in the MELSEC iQ-R series. Replace it with the terminal block cover that comes with the conversion adapter.

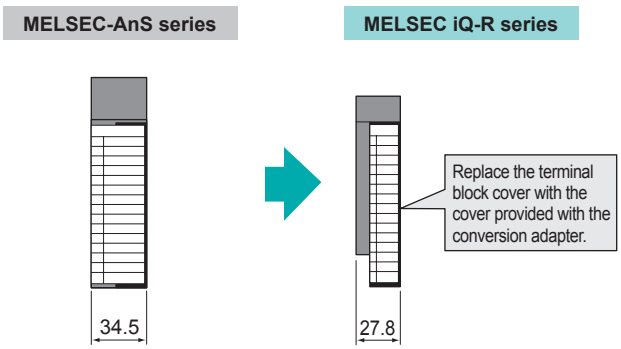

Base Adapter

Using a base adapter that permits the MELSEC iQ-R series to be mounted using the mounting holes of the MELSEC-AnS series is recommended. (No need to drill any additional mounting holes.)

External Dimensions

Conversion Adapter

ERNT-ASQTXY10
ERNT-ASQTX40
ERNT-ASQTY22
ERNT-ASQTY40
ERNT-ASQTY50
ERNT-ASQTY80
ERNT-ASQT64AD
ERNT-ASQT62DA
ERNT-ASQT68DA

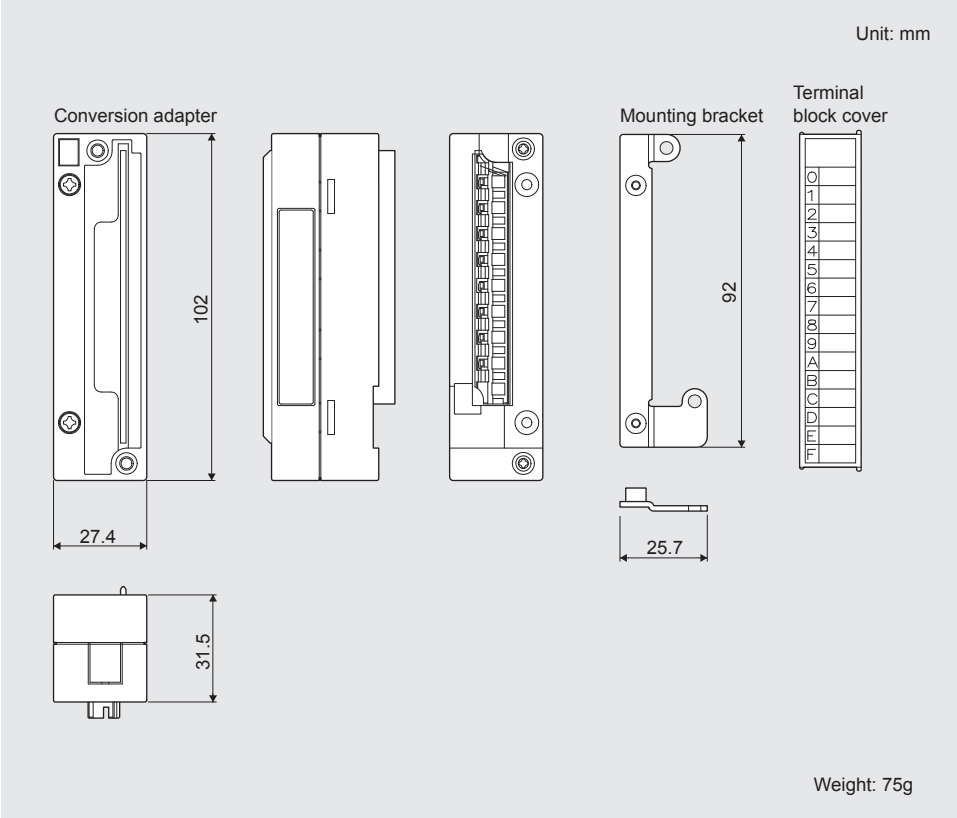

ERNT-ASQT68AD

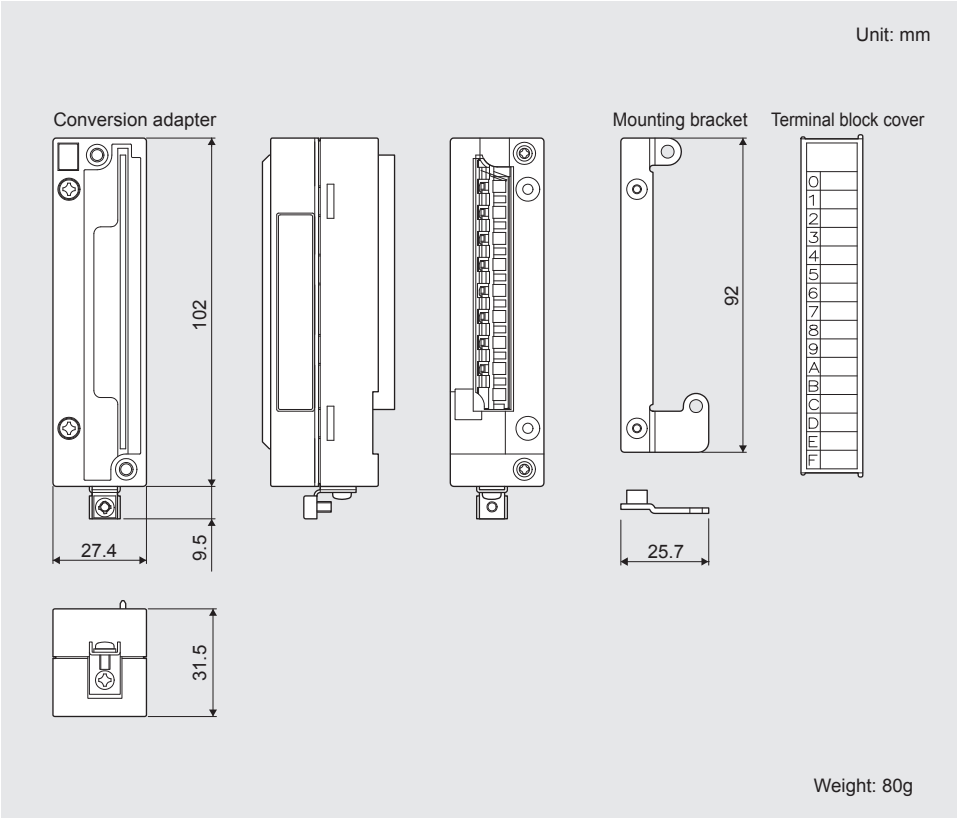

ERNT-ASLCXY81

Unit: mm

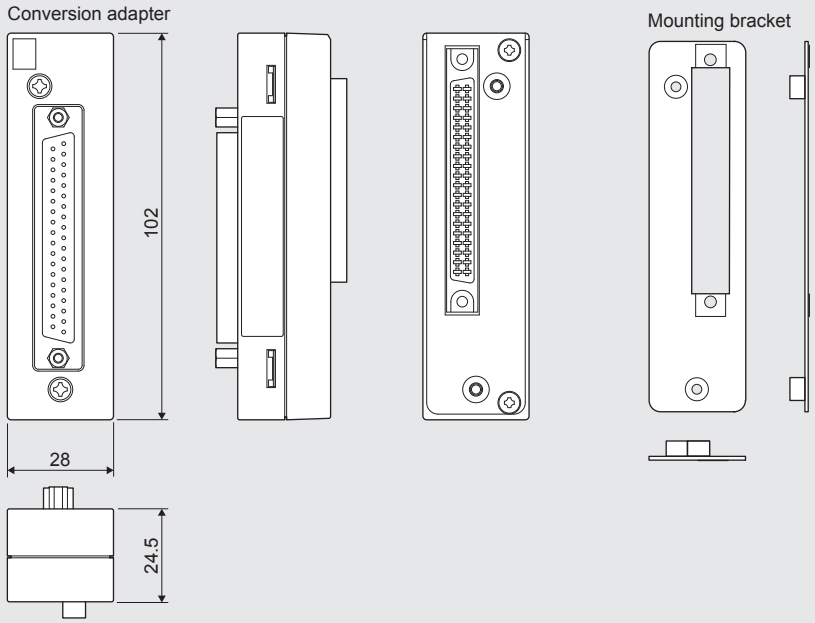

Weight: 95g

ERNT-ASLTD61
ERNT-ASLTD62

Unit: mm

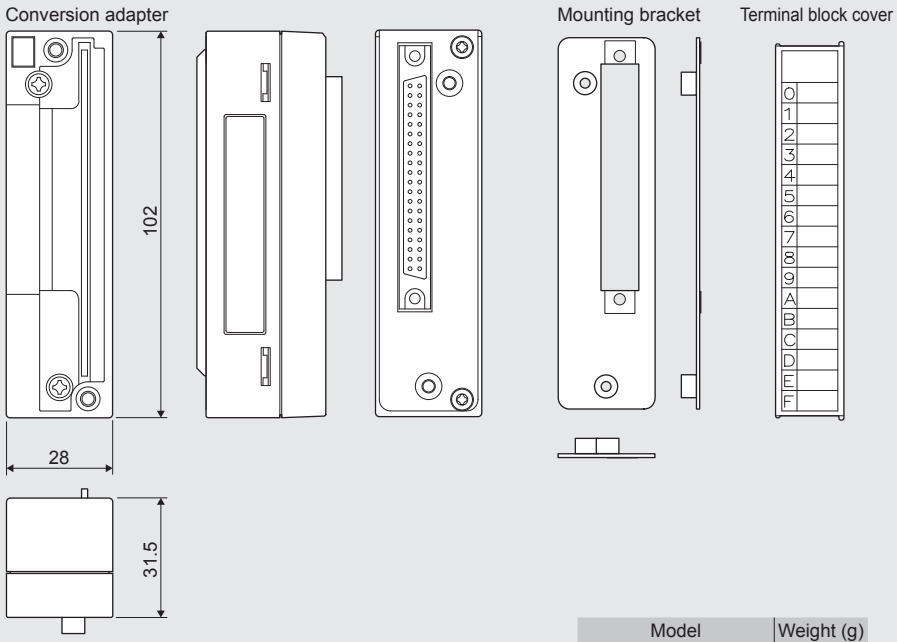

Model	Weight (g)
ERNT-ASLTD61	80
ERNT-ASLTD62	85

Base Adapter

ERNT-ASQB38N
ERNT-ASQB35N
ERNT-ASQB00JN
ERNT-ASQB68N
ERNT-ASQB65N
ERNT-ASQB58N

Unit: mm

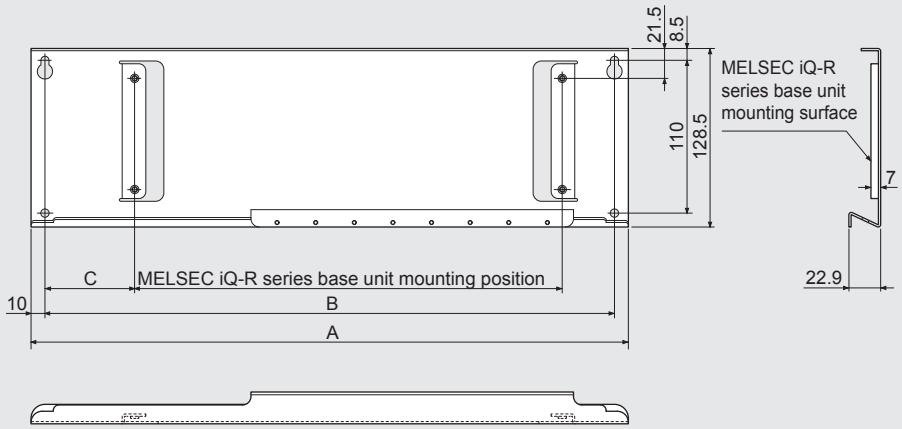

Model	A	B	C	Weight (g)
ERNT-ASQB38N	430	410	64.6	840
ERNT-ASQB35N	325	305	53.8	635
ERNT-ASQB00JN	330	310	58.8	640
ERNT-ASQB68N	420	400	62	820
ERNT-ASQB65N	315	295	51.2	615
ERNT-ASQB58N	365	345	21.1	700

■Product List

MELSEC-A Series / MELSEC iQ-R Series Upgrade Tool

Product name		Model
Conversion adapter	1-slot type	**ERNT-1AR10XY**
		ERNT-1AR40Y
		ERNT-1AR41X
		ERNT-1AR41Y
		ERNT-1AR61D
		ERNT-1AR68AD
		ERNT-1AR68AN
		ERNT-AQT62DA
		ERNT-AQT68DA
		ERNT-ASLCXY81
	2-slot type	**ERNT-1AR10AY**
		ERNT-1AR11X13Y
		ERNT-1AR51Y
		ERNT-1AR616AD
		ERNT-1AR616DA
Conversion adapter support flange		**ERNT-1AR12F**
		ERNT-1AR5F
		ERNT-1AR8F
Base adapter		**ERNT-AQB35N**
		ERNT-AQB38N
		ERNT-AQB55N
		ERNT-AQB58N
		ERNT-AQB65N
		ERNT-AQB68N

MELSEC-AnS Series / MELSEC iQ-R Series Upgrade Tool

Product name		Model
Conversion adapter	1-slot type	**ERNT-ASQTXY10**
		ERNT-ASLCXY81
		ERNT-ASLTD61
		ERNT-ASLTD62
		ERNT-ASQT62DA
		ERNT-ASQT64AD
		ERNT-ASQT68AD
		ERNT-ASQT68DA
		ERNT-ASQTX40
		ERNT-ASQTY22
		ERNT-ASQTY40
		ERNT-ASQTY50
		ERNT-ASQTY80
Base adapter		**ERNT-ASQB00JN**
		ERNT-ASQB35N
		ERNT-ASQB38N
		ERNT-ASQB58N
		ERNT-ASQB65N
		ERNT-ASQB68N

MITSUBISHI ELECTRIC ENGINEERING COMPANY LIMITED

[NAGOYA ENGINEERING OFFICE] 139 Shimoyashiki, Shimoyashikicho, Kasugai, Aichi, 486-0906, Japan

⚠ Before using this product, ensure the safety in case of failure.
We shall not bear any responsibility for consequential damages caused by failure of the product.

MEI C158E-18Z (1812) MEE

New publication, effective Dec. 2018
Specifications are subject to change without notice.